SPARE PARTS EXPLODED VIEW
GAS BURNERS
Model
CB-VG6DP/TC (50/60Hz)

R8220064-02 - 03/07/2015

Col	Reference	Model type	Begin	End
1	3833569	BB-VG6.1600 DP / TC	09-2011	-
2	3833948	BB-VG6.1600 DP / TC 60H	10-2012	-
3	3833570	BB-VG6.2100 DP / TC	09-2011	-
4	3833949	BB-VG6.2100 DP / TC 60H	03-2013	-
5	3833422	CH-G0731-T1/KN	02-2011	-
6	3833484	CH-G0731 - T2/KL	10-2011	-
7	3833615	CH-G0731 - T3/KM	10-2011	-
8	3833486	GT-d334 - 1”1/4-Rp2” /TC	09-2011	-
9	3833487	GT-d335 - 1”1/2-Rp2” /TC	09-2011	-
10	3833490	GT-s317 - 2”-Rp2” /TC	09-2011	-
11	3833489	GT-s316 - 65-DN65 /TC	10-2011	-
12	3833488	GT-s315 - 80-DN80 /TC	11-2011	-

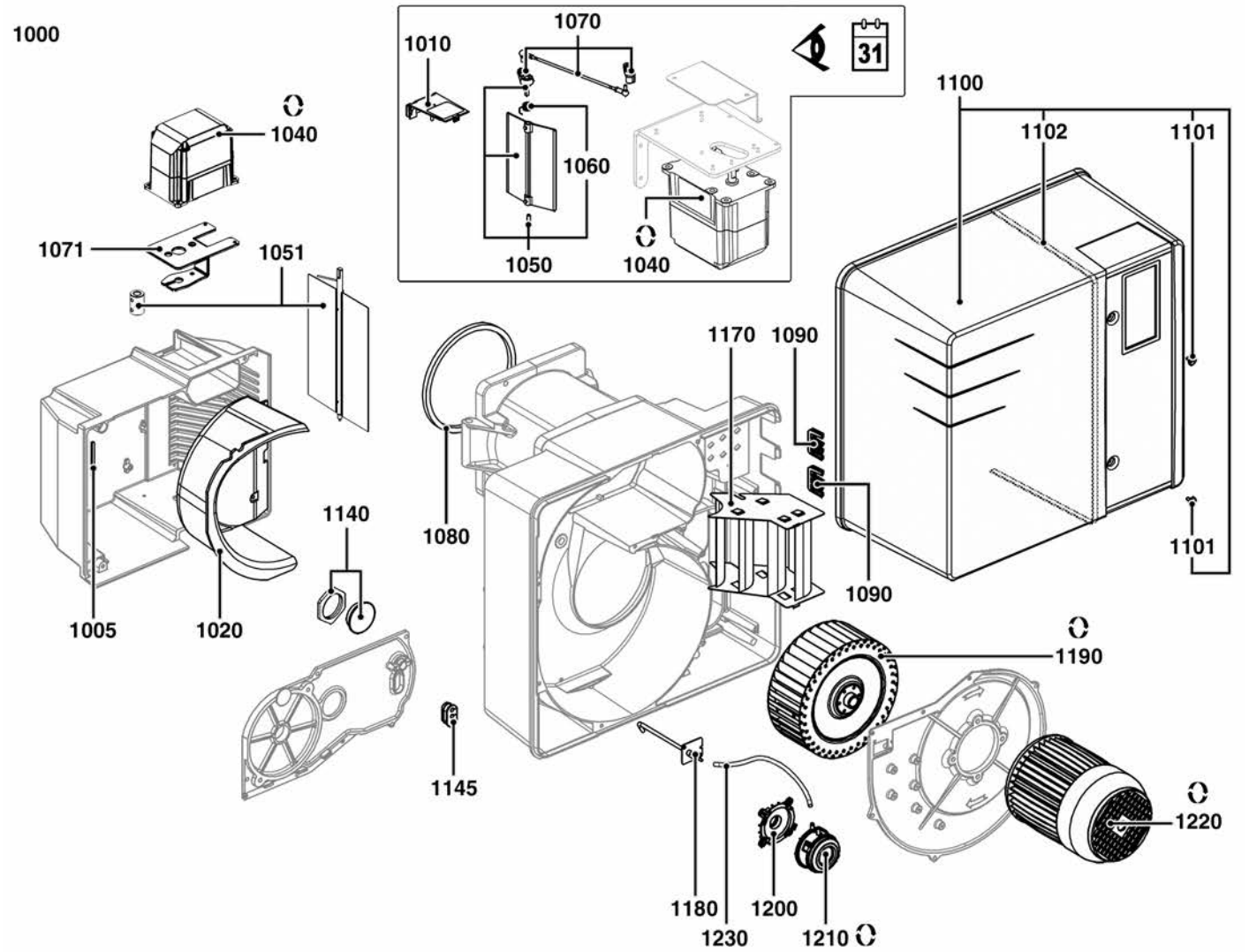

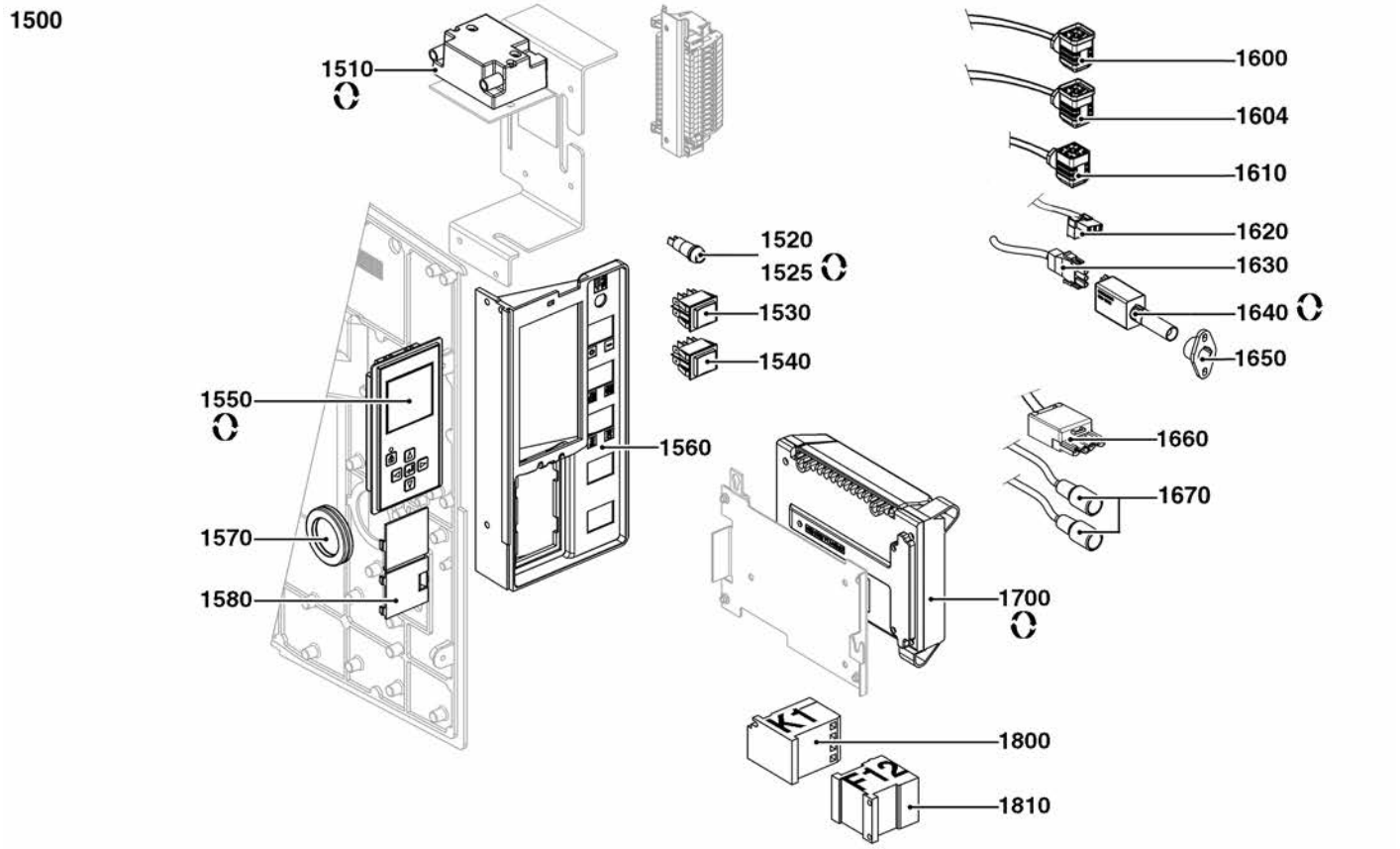

R8220152

07/2015-R8220064-420010666000A

	Description	Manf. Pt. N	Type	BB-VG6.1600 DP /TC	BB-VG6.1600 DP /TC 60H	BB-VG6.2100 DP /TC	BB-VG6.2100 DP /TC 60H	CH-G0731-T1/KN	CH-G0731 - T2/KL	CH-G0731 - T3/KM	GT-0334 - 1"1/4-Rp2"/TC	GT-0335 - 1"1/2-Rp2"/TC	GT-S317 - 2"-Rp2"/TC	GT-S316 - 65-DN65/TC	GT-S315 - 80-DN80/TC	1	2	3	4	5	6	7	8	9	10	11	12	13	14	15	16	17	18	From	to
1000	**BURNER BODY**																																	
1005	AIR BOX GASKET	13009640														●	●	●	●															
1010	AIR BOX COVER	13009642														●	●	●	●															05/15
1020	AIR BOX INSULATION	13009641														●	●	●	●															
1040	ACTUATOR STE 4,5 Q3.51/6 R 3NM	65301001														●	●	●	●															
1050	AIR FLAP WITH FITTINGS	13014117														●	●	●	●															05/15
1051	AIR FLAP CPL.	65326227														●	●	●	●														06/15	
1060	AIR SPRING (GREY)	13011751														●	●	●	●															05/15
1070	COUPLING CPL.	65301070														●	●	●	●															05/15
1071	SERVOMOTOR HOLDER	65326226														●	●	●	●														06/15	
1080	CASING GASKET	13010055														●	●	●	●															
1090	GROMMET/HOUSING	13016845														●	●	●	●															
1100	HOOD VECTRON5 AND V6+MOUNTING SCREW	65301016														●	●	●	●															
1101	FLAT HEAD SCREW M5X15	65300519														●	●	●	●															
1102	GASKET STRIP/COVER	13009772														●	●	●	●															
1140	INSPECTION GLASS	13010008														●	●	●	●															
1145	CABLE GROMMET	13009648														●	●	●	●															
1170	AIR RECTIFIER	13009748														●	●	●	●															
1180	PRESSURE TAP	13009738														●	●	●	●															
1190	FAN WHEEL D240X114 d24	13009736														●			●															
	FAN WHEEL D240X82 d19	13009649															●																	
	FAN WHEEL D250X114 d24	13009737																●																
1200	AIR PRESSURE SWITCH BASE D32	13020723														●	●	●	●															
1210	AIR PRESSURE SWITCH 604 1-10MBAR	65300991														●	●	●	●															
1220	MOTOR 1.5KW230/400V D19 + PLUG	13009654															●																	
	MOTOR 2.2KW230/400V D24+PLUG	13009739														●																		
	MOTOR 2.5KW230/400V D24+PLUG	13009740																●	●															
1500	**ELECTRIC PART**																																	
1510	IGNITER EBI 2X7.5 230V	13009663														●	●	●	●															
1520	FUSE HOLDER + FUSE 6.3A	13016457														●	●	●	●															
1525	FUSE 5X20 6.3A	13016028														●	●	●	●															
1530	OPERATING SWITCH ON/OFF	13010007														●	●	●	●															
1540	OPERATING SWITCH - OPERATION	13014009														●	●	●	●															
1550	DISPLAY FOR CONTROL UNIT TCG-TCH REL.2.2	65301109														●	●	●	●															
1560	PLASTIC CONTROL BOARD	65300992														●	●	●	●															
1570	CABLE GROMMET D54/D47/D36	65300993														●	●	●	●															
1580	SHUTTER/CONSOLE	13009661														●	●	●	●															
1600	CABLE + CONNECT. / GAS PRESSURE SWITCH	65301019														●	●	●	●															
1604	GAS PRESSURE SWITCH CABLE+CONNECTOR	65301034	TC													●	●	●	●															
1610	CABLE + CONNECT. / GAS VALVE	65301020														●	●	●	●															
1620	CABLE / IGNITER	65300997														●	●	●	●															
1630	CABLE + CONNECTOR / IRD PROBE	65301058														●	●	●	●															
1640	PHOTOCELL IRD 1020.1 WHITE AXIAL	65301035														●	●	●	●															
1650	PHOTOCELL HOLD.M93 FOR IRD1020.1	13010461														●	●	●	●															
1660	CABLE L560+PLUG 4P/MOTOR	65301000														●	●	●	●															
1670	IGNITION CABLE	13009743														●	●	●	●															
1700	CONTROL UNIT TCG 511.01TC	65300881														●	●	●	●															
1800	CONTACTOR	13009778														●	●	●	●															
1810	THERMAL RELAY LR2K 5.5-8.0A	13009746														●	●	●	●															

2000

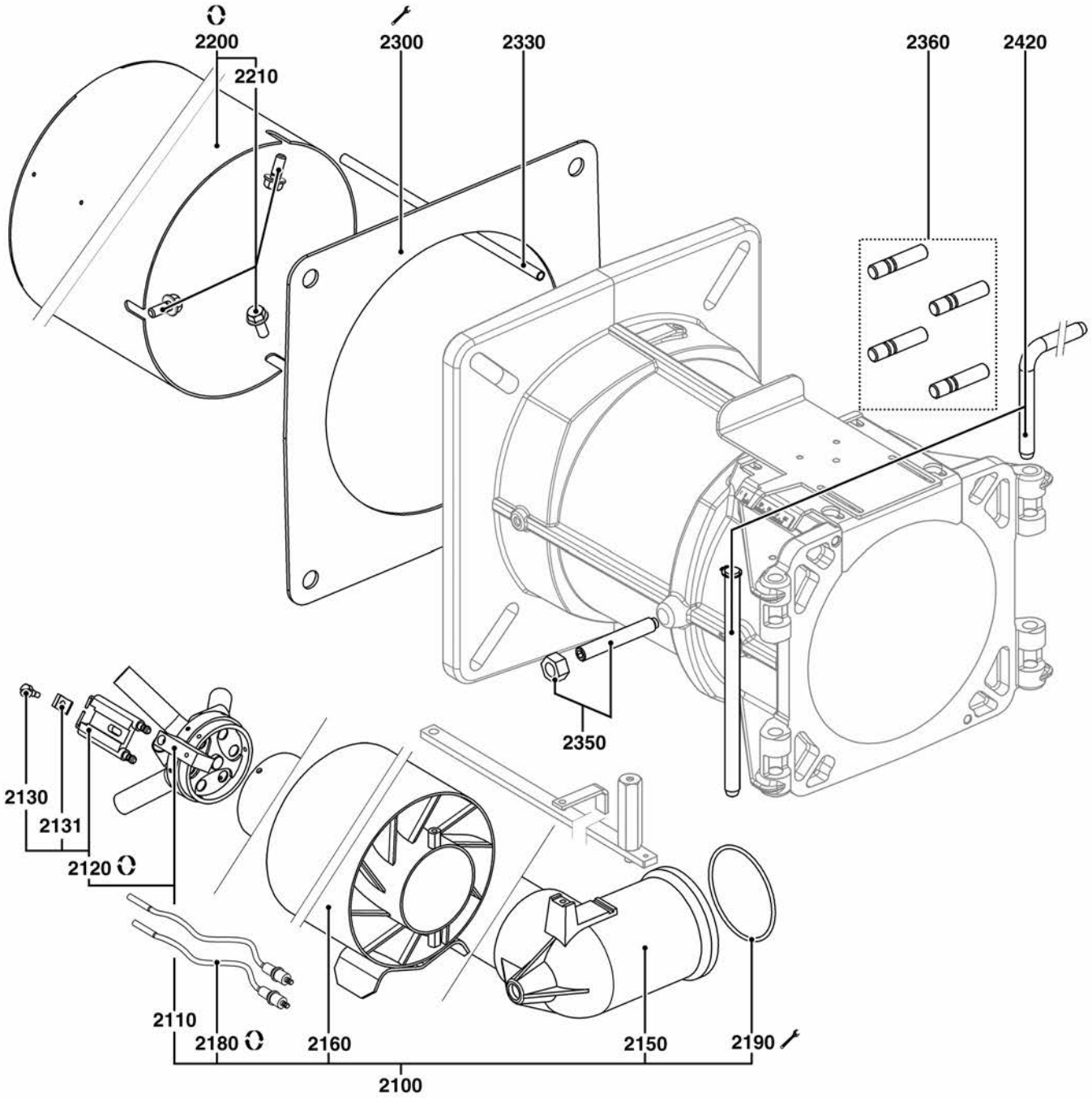

R8220035

	Description	Manf. Pt. N	Type	BB-VG6.1600 DP /TC	BB-VG6.1600 DP /TC 60H	BB-VG6.2100 DP /TC	BB-VG6.2100 DP /TC 60H	CH-G0731-T1/KN	CH-G0731 - T2/KL	CH-G0731 - T3/KM	GT-d334 - 1"1/4-Rp2"/TC	GT-d335 - 1"1/2-Rp2"/TC	GT-s317 - 2"-Rp2"/TC	GT-s316 - 65-DN65/TC	GT-s315 - 80-DN80/TC	From	to
				1	2	3	4	5	6	7	8	9	10	11	12	13 14 15 16 17 18	
2000	COMBUSTION HEAD																
2100	GAS LINE WITH FITTINGS T1/KN	65301027						●									
	GAS LINE WITH FITTINGS T2/KL	65301028							●								
	GAS LINE WITH FITTINGS T3/KM	65301029								●							
2110	GAS DIFFUSER ASSEMBLY	65301030						●	●	●							
2120	ELECTRODES BLOCK	13009726						●	●	●							
2130	WASHER HEAD SCREW M4/ELECTRODES BLOCK	13010049						●	●	●							
2131	SPRING/ELECTRODES BLOCK FLANGE	13009725						●	●	●							
2150	GAS ELBOW+TUBE LG.506	65301117						●									
	GAS ELBOW+TUBE LG.606	65301119								●							
	GAS ELBOW+TUBE LG.706	65301118							●								
2160	SWIRLER	65301120						●	●	●							
2180	IGNITION CABLES L950	13009727						●	●	●							
2190	O-RING D.75X4	13009731						●	●	●							
2200	FLAME TUBE D227/157 L380	65301031						●									
	FLAME TUBE D227/157 L530	65301033								●							
	FLAME TUBE D227/157 L623	65301032							●								
2210	BURNER TUBE SCREW FIX. KIT (X3)	13009723						●	●	●							
2300	GASKET/BOILER FRONT 326X335X3	13009719						●	●	●							
2330	FURNACE PRESSURE TUBE LG. 250MM	65300252						●									
	FURNACE PRESSURE TUBE LG. 350MM	65300597							●	●							
2350	MOUNTING SCREW+NUT M12X80	65300854						●	●	●							
2360	STUDS SET M12X40+NUT	13022998						●	●	●							
2420	HINGE KIT	13009724						●	●	●							

3000

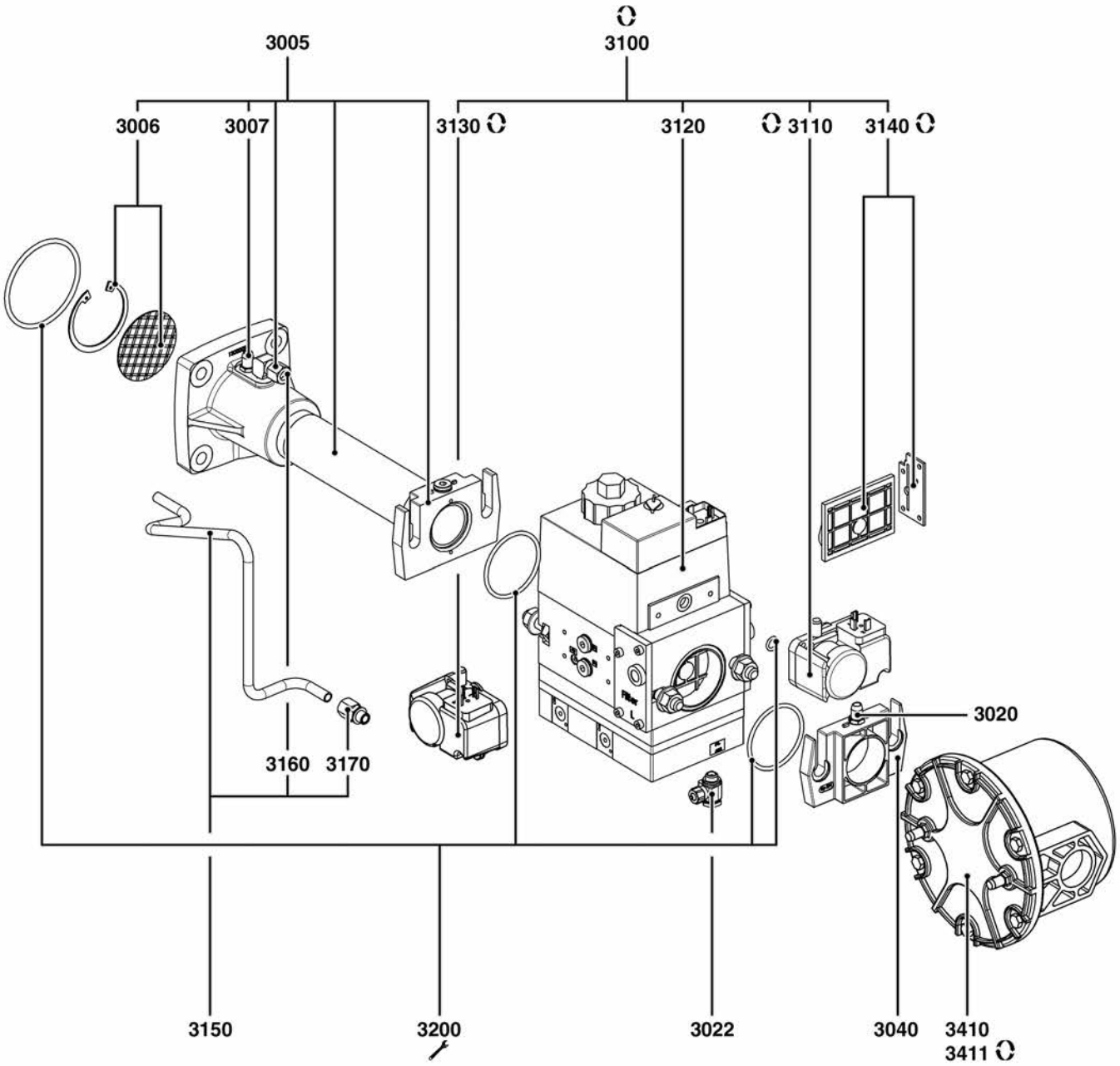
3005
3100
3006
3007
3130
3120
3110
3140
3160
3170
3020
3150
3200
3022
3040
3410
3411

	Description	Manf. Pt. N	Type	BB-VG6.1600 DP /TC	BB-VG6.1600 DP /TC 60H	BB-VG6.2100 DP /TC	BB-VG6.2100 DP /TC 60H	CH-G0731-T1/KN	CH-G0731 - T2/KL	CH-G0731 - T3/KM	GT-d334 - 1"1/4-Rp2"/TC	GT-d335 - 1"1/2-Rp2"/TC	GT-s317 - 2"-Rp2"/TC	GT-s316 - 65-DN65/TC	GT-s315 - 80-DN80/TC	31 From	31 to
				1	2	3	4	5	6	7	8	9	10	11	12	13	14	15	16	17	18		
3000	GAS TRAIN																						
3005	COLLECTOR MOUNT RP 1¨1/4	13014122									●												
	COLLECTOR MOUNT RP 2	13014128										●											
3006	STABILISER + CIRCLIP D.60	13011367									●	●											
3007	PRESSURE TAP R1/8	13009722									●	●											
3022	BANJO UNION LCK-G1/8-PK4	13020682									●	●											
3040	FLANGE MB...420 RP2+P TAP	13007859										●											
	INLET FLANGE MB410/412	13010085									●												
3100	GAS VALVE MBVEF412 B01 S32 RP1"1/4	65301036									●												
	GAS VALVE MBVEF420 B01 S32 RP2"	65301037										●											
3110	GAS PRESS. SWITCH GW 150 A5 30-150MB DIN	13010078									●	●											
3120	DUN COIL No. 1205 MBVEF412	13010084									●												
	DUN COIL No. 1215 MBVEF420	13011726										●											
3130	GAS PRESS.SWITCH GW 50 A5 2,5-50MB	65323019									●	●											
3140	FILTERING ELEMENT /MB...410/412	13016012									●												
	FILTERING ELEMENT /MB...420	13007901										●											
3150	GAS PRESSURE TUBE MBVEF412+UNION	65300649									●												
	GAS PRESSURE TUBE MBVEF420+UNION	65300669										●											
3160	ANGLED UNION	13023188									●	●											
3170	UNION G1/8 + GASKET	13023187									●	●											
3200	GASKET KIT MB...420	65300671										●											
	GASKET SET MB...412	65300576									●												
3410	GAS FILTER ANELLO RP 2	13009700									●	●											
3411	FILT. ELEMENT RP2 + GASKET	13010044									●	●											

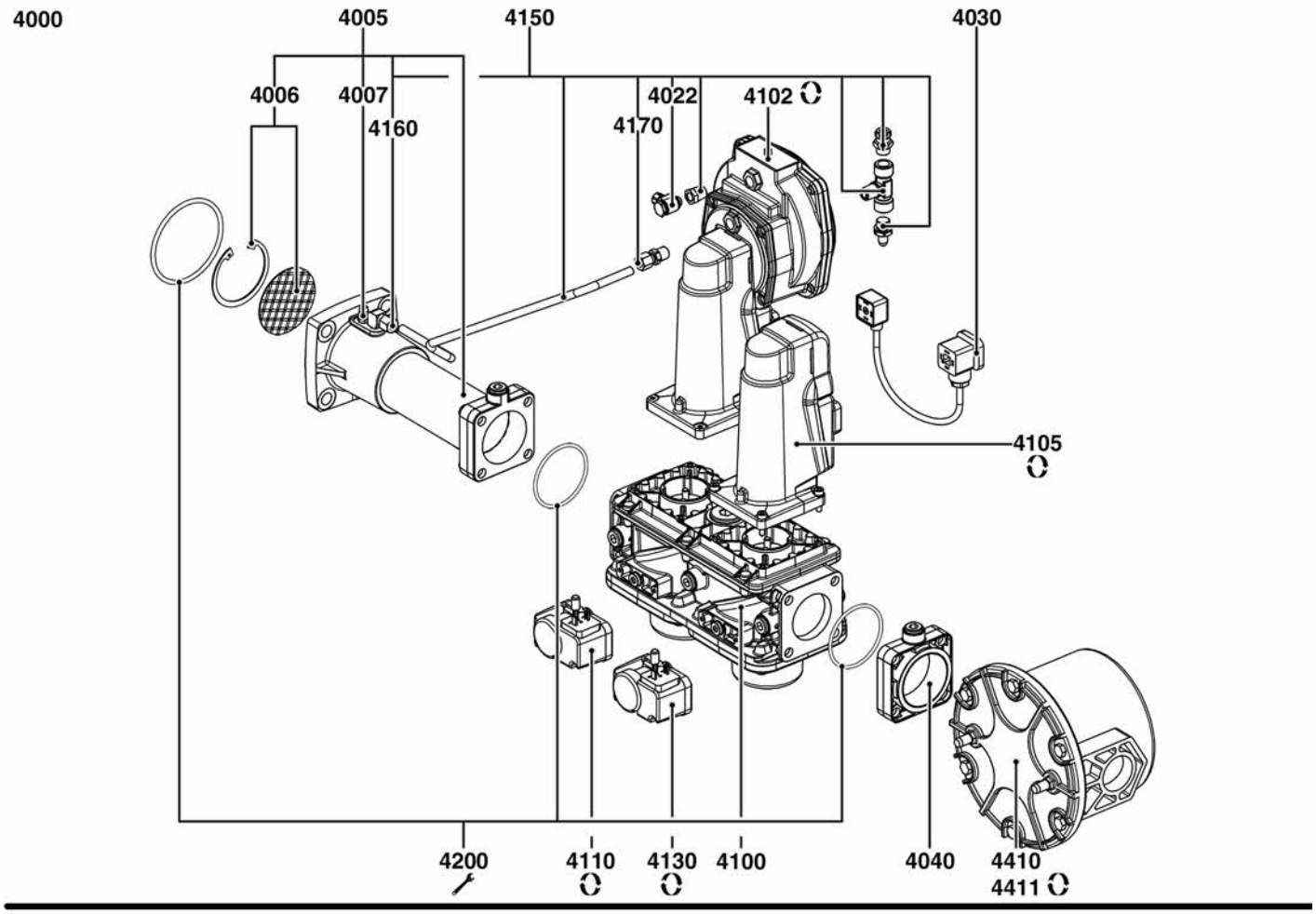
4000
4005
4150
4030
4006
4007
4160
4022
4102
4170
4105
4200
4110
4130
4100
4040
4410
4411

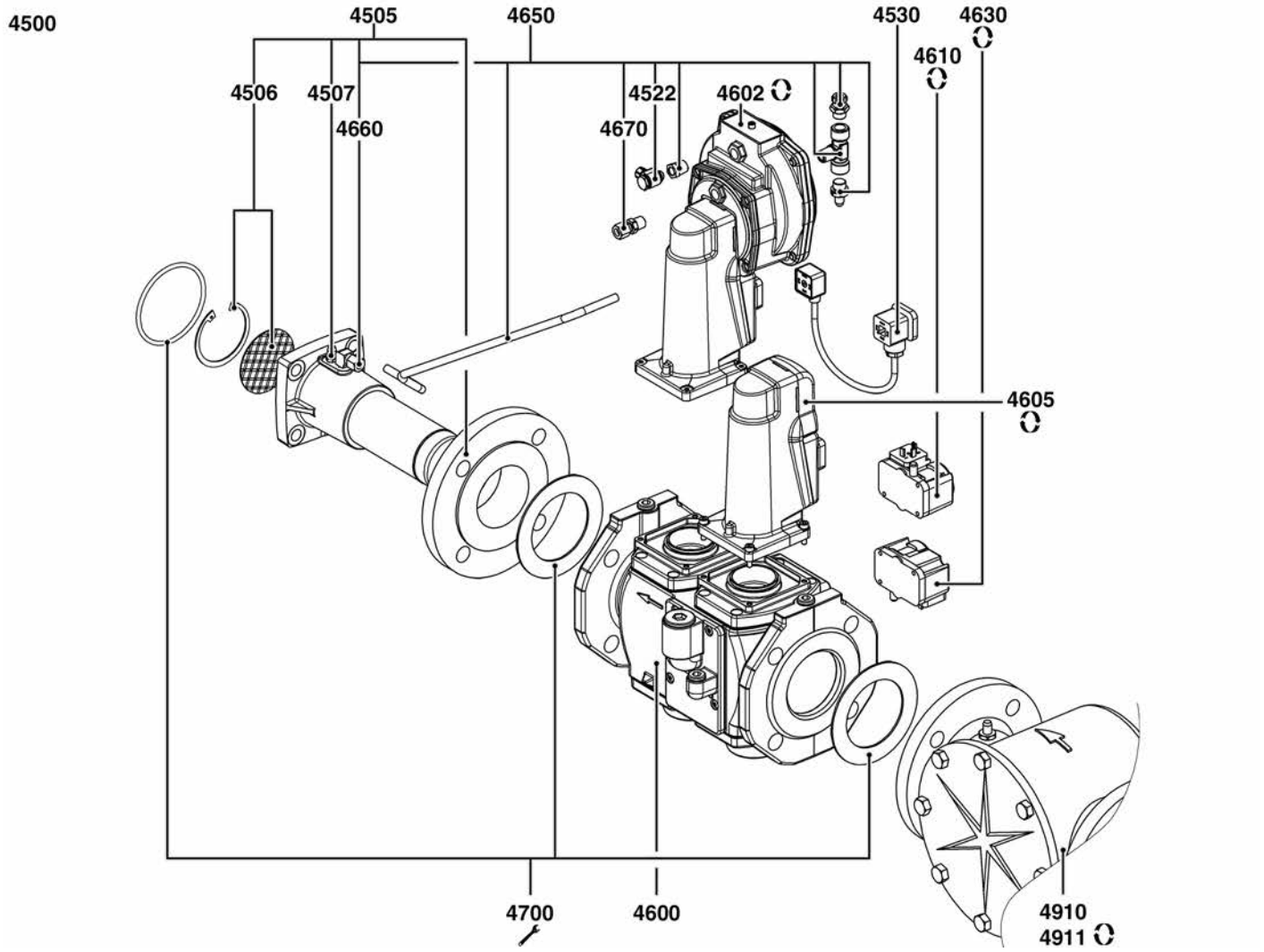
4500
4505
4650
4530
4630
4610
4506
4507
4660
4522
4602
4670
4605
4700
4600
4910
4911

R8220037

	Description	Manf. Pt. N	Type	BB-VG6 1600 DP /TC	BB-VG6 1600 DP /TC 60H	BB-VG6 2100 DP /TC	BB-VG6 2100 DP /TC 60H	CH-G0731-T1/KN	CH-G0731 - T2/KL	CH-G0731 - T3/KM	GT-d334 - 1"1/4-Rp2"/TC	GT-d335 - 1"1/2-Rp2"/TC	GT-s317 - 2"-Rp2"/TC	GT-s316 - 65-DN65 /TC	GT-s315 - 80-DN80 /TC	1	2	3	4	5	6	7	8	9	10	11	12	13	14	15	16	17	18	From	to
4000	**GAS TRAIN**																																
4005	COMPLETE GAS SUPPLY TUBE RP2	65301024																						●									
4006	STABILISER + CIRCLIP D.60	13011367																						●									
4007	PRESSURE TAP R1/8	13009722																						●									
4022	BANJO UNION LCK-G1/8-PK4	13020682																						●									
4030	CONNECTING CABLE SKP	13020958																						●									
4040	INLET FLANGE AGA51	65300871																						●									
4100	GAS VALVE VGD20 5011 RP2''	65311581																						●									
4102	GAS SERVOM. SKP75.003E2 W/O LIMIT SW.	13020950																						●									
4105	GAS SERVOM. SKP15.000E2 W/O LIMIT SW.	13020951																						●									
4110	GAS PRESS. SWITCH GW 150 A5 30-150MB DIN	13010078																						●									
4130	GAS PRESS.SWITCH GW 50 A5 2,5-50MB	65323019																						●									
4150	GAS PR. TUBE VGD20 RP2 NC95/210-VG5/6	65301075																						●									
4160	ANGLED UNION	13023188																						●									
4170	STRAIGHT UNION	13009721																						●									
4200	GASKET KIT VGG,VGF10/VGD20 RP2	13011733																						●									
4410	GAS FILTER ANELLO RP 2	13009700																						●									
4411	FILT. ELEMENT RP2 + GASKET	13010044																						●									
4500	**GAS TRAIN**																																
4505	COMPLETE GAS SUPPLY TUBE DN65	65301022																							●								
	COMPLETE GAS SUPPLY TUBE DN80	65301023																								●							
4506	STABILISER + CIRCLIP D.60	13011367																							●	●							
4507	PRESSURE TAP R1/8	13009722																							●	●							
4522	BANJO UNION LCK-G1/8-PK4	13020682																							●	●							
4530	CONNECTING CABLE SKP	13020958																							●	●							
4600	GAS VALVE VGD40 065 DN65	65323661																							●								
	GAS VALVE VGD40 080 DN80	65311583																								●							
4602	GAS SERVOM. SKP75.003E2 W/O LIMIT SW.	13020950																							●	●							
4605	GAS SERVOM. SKP15.000E2 W/O LIMIT SW.	13020951																							●	●							
4610	GAS PRESS. SWITCH GW 150 A5 30-150MB DIN	13010078																							●	●							
4630	GAS PRESS.SWITCH GW 50 A5 2,5-50MB	65323019																							●	●							
4650	GAS PR.TUB.EQ. VGD40 DN65 NC95/210-VG5/6	65301025																							●								
	GAS PR.TUBE EQ.VGD40 DN80 NC210-VG6	65301026																								●							
4660	ANGLED UNION	13023188																							●	●							
4670	STRAIGHT UNION	13009721																							●	●							
4700	GASKET KIT VGD40 DN65	13013781																							●								
	GASKET KIT VGD40 DN80	13013782																								●							
4910	EXTERNAL FILTER	13013787																								●							
	EXTERNAL FILTER DN65	13009703																							●								
4911	GAS FILTERING ELEMENT DN65 WITH GASKET	13009704																							●								
	GAS FILTERING ELEMENT DN80 WITH GASKET	13013788																								●							

	6XXXXXXX	DE / NL	FR / ES	IT	X
1005	13009640	DICHTUNG LUFTKASTEN DICHTING LUCHTKAST	JOINT BOITE A AIR JUNTA CAJA DE AIRE	GUARNIZIONE SCATOLA DELL'ARIA	1
1010	13009642	ABDECKUNG LUFTKASTEN DEKSEL LUCHTKAST	COUVERCLE BOITE A AIR TAPA CAJA DE AIRE	COPERCHIO SCATOLA DELL'ARIA	1
1020	13009641	ISOLIERUNG LUFTKASTEN ISOLATIE LUCHTKAST	ISOLATION BOITE A AIR AISLAMIENTO CAJA DE AIRE	ISOLAMENTO SCATOLA DELL'ARIA	1
1040	65301001	STELLANTRIEB STE 4,5 Q3.51/6 R 3NM SERVOMOTOR STE 4,5 BO37/6	SERVOMOTEUR STE 4,5 Q3.51/6 R 3NM SERVOMOTOR STE 4,5 BO37/6	SERVOMOTORE STE 4,5 Q3.51/6 R 3NM	1
1050	13014117	AUSGERÜSTETE LUFTKLAPPE VOLLEDIGE LUCHTKLEP	VOLET D'AIR EQUIPE REJILLA DE AIRE EQUIPADA	SERRANDA DELL'ARIA EQUIPAGGIATA	1
1051	65326227	KOMPL. LUFTKLAPPE COMPLETE LUCHTKLEP	VOLET D'AIR EQUIPE VÁLVULA DE AIRE EQUIPADA	SERRANDA DELL'ARIA EQUIPAGGIATA	1
1060	13011751	GRAUE FEDER/ LUFT VEER GRIJS/ LUCHT	RESSORT GRIS/ AIR RESORTE GRIS/ AIRE	MOLLA GRIGIA/ ARIA	1
1070	65301070	UEBERTRAGUNGSTANGE BG+WINKELGELENK COMPLETE KOPPELING	ACCOUPLEMENT EQUIPE ACOPLAMIENTO EQUIPADO	ACCOPPIAMENTO EQUIPAGGIATO	1
1071	65326226	STELLANTRIEBHALTER STEUN REGELMOTOR	SUPPORT SERVOMOTEUR SOPORTE SERVOMOTOR	SUPPORTO SERVOMOTORE	1
1080	13010055	GEHÄUSEDICHTUNG DICHTING CARTER	JOINT CARTER JUNTA CÁRTER	GUARNIZIONE CARTER	1
1090	13016845	KABELDURCHFUEHRUNG/GEHAEUSE DRAADDOORVOER/BRANDERHUIS	PASSE FIL/CARTER PASACABLES/CÁRTER	PASSAFILO/ CARTER	1
1100	65301016	BRENNERHAUBE VECTRON5 U. V6 KPL. COMPLETE KAP VECTRON5 EN V6	CAPOT VECTRON5 ET V6+VIS CUBIERTA VECTRON5 Y V6 EQUIPADA	COFANO V5 E V6 EQUIPAGGIATO	1
1101	65300519	FLACHKOPFSCHRAUBE M5X15 PLATKOPSCHROEF M5X15	VIS A TETE PLATE M5X15 TORNILLO DE CABEZA PLANA M5X15	VITE A TESTA PIANA M5X15	1
1102	13009772	DICHTBAND / HAUBE DICHTINGSSTRIP / BRANDERKAP	BANDE D'ETANCHEITE / CAPOT BANDA ESTANQUEIDAD / CUBIERTA	NASTRO SIGILLANTE/ COPERTURA	1
1140	13010008	SCHAUGLAS KIJKGLAS	VERRE DE REGARD VISOR	VISORE DI CALDAIA	1
1145	13009648	KABELDURCHFÜHRUNG DRAADGELEIDER	PASSE FIL PASACABLES	PASSA FILO	1
1170	13009748	LUFTGLEICHRICHTER LUCHTRECYCLAGE	REDRESSEUR D'AIR RECTIFICADOR DE AIRE	RADDRIZZATORE D'ARIA	1
1180	13009738	DRUCKANSCHLUSS DRUKAANSLUITING	PRISE DE PRESSION TOMA DE PRESIÓN	PRESA DI PRESSIONE	1
1190	13009649	VENTILATORRAD D240X82 d19 VENTILATORRAD D240X82 d19	TURBINE D240X82 d19 TURBINA D240X82 d19	VENTOLA D240X82 d19	1
	13009736	LÜFTERRAD D240X114 d24 VENTILATOR D240X114 d24	TURBINE D240X114 d24 TURBINA D240X114 d24	TURBINA D240X114 d24	1
	13009737	LÜFTERRAD D250X114 d24 VENTILATOR D250X114 d24	TURBINE D250X114 d24 TURBINA D250X114 d24	TURBINA D250X114 d24	1
1200	13020723	HALTER LUFTDRUCKWAECHTER D32 STEUN MANOSTAAT HUBA D32	SUPPORT MANOSTAT AIR D32 SOPORTE DEL MANOSTATO DE AIRE D32	SUPPORTO PRESSOSTATO DELL'ARIA D32	1
1210	65300991	LUFTDRUCKWAECHTER HUBA 604 1-10MBAR LUCHTDRUKBEWAKER HUBA 604 1-10MBAR	MANOSTAT HUBA 604 1-10MBAR PRESSOSTATO AIRE HUBA 604 1-10MBAR	MANOSTATO HUBA 604 1-10MBAR	1
1220	13009654	MOTOR 1,5KW230/400V D19+STECKER MOTOR 1,5KW 230/400V D19 + STEKKER	MOTEUR 1,5KW230/400V D19+PRISE MOTOR 1,5KW230/400V D19+TOMA	MOTORE 1,5KW230/400V D19+PRESA	1
	13009739	MOTOR 2,2KW230/400V D24+STECKER MOTOR 2,2KW230/400V D24+STEKKER	MOTEUR 2,2KW230/400V D24+PRISE MOTOR 2,2KW230/400V D24+TOMA	MOTORE 2,2KW230/400V D24+PRESA	1
	13009740	MOTOR 2,5KW230/400V D24+STECKER MOTOR 2,5KW230/400V D24+STEKKER	MOTEUR 2,5KW230/400V D24+PRISE MOTOR 2,5KW230/400V D24+TOMA	MOTORE 2,5KW230/400V D24+PRESA	1
1510	13009663	ZÜNDVORRICHTUNG EBI 2X7,5 230V ONTSTEKER EBI 2X7,5 230V	ALLUMEUR EBI 2X7,5 230V DISP. ENCENDIDO EBI 2X7,5 230V	ACCENDITORE EBI 2X7,5 230V	1
1520	13016457	SICHERUNGHALTER+SICHERUNG 6.3A ZEKERINGHOUDER+ZEKERING 6,3A	PORTE FUSIBLE+FUSIBLE 6.3A PORTA FUSIBLE+FUSIBLE 6.3A	PORTAFUSIBILE + FUSIBILE 6.3A	1
1525	13016028	FEINSICHERUNG 5X20 6,3 A (TRAEGE) ZEKERING 5X20 6.3A	FUSIBLE 5X20 6.3A (CALIBRE) FUSIBLE 5X20 6.3A	FUSIBILE 5X20 6.3A	1
1530	13010007	SCHALTER EIN/AUS SCHAKELAAR ON/OFF	INTERRUPTEUR MARCHE/ARRET INTERRUPTOR	INTERRUTTORE ON/OFF	1
1540	13014009	BETRIEBSSCHALTER SCHAKELAAR - BEDRIFJ	INTERRUPTEUR - FONCTIONNEMENT INTERRUPTOR	INTERRUTTORE - FUNZIONAMENTO	1
1550	65301109	ANZEIGE FUR AUTOMAT. TCG-TCH REL.2.2 DISPLAY V. BRANDERAUTOM.TCG-TCH REL.2.2	AFFICHEUR POUR COFFRET TCG-TCH REL. 2.2 PANTALLA P. PROGRAMAD. TCG-TCH REL.2.2	DISPLAY PER APPARECCHIA.TCG-TCH REL.2.2	1
1560	65300992	BEDIENFELD KUNSTSTOFF PLASTIC BEDIENINGSPANEEL	PUPITRE DE COMMANDE PLASTIQUE PUPITRE DE MANDO PLÁSTICO	QUADRO DI COMANDO PLASTICO	1
1570	65300993	KABELDURCHFUEHRUNG D54/D47/D36 DRAADDOORVOER D54/D47/D36	PASSE FIL D54/D47/D36 PASACABLE D54/D47/D36	PASSA FILO D54/D47/D36	1
1580	13009661	VERSCHLUSS / BEDIENFELD AFSLUITER / BEDIENINGSPANEEL	OBTURATEUR / PUPITRE OBTURADOR / TABLERO	OTTURATORE / QUADRO	1
1600	65301019	KABEL M. STECKER / GASDRUCKWAECHTER KABEL + STEKKER GASDRUKBEWAKER	CABLE + CONNECT. / MANOSTAT GAZ CABLE + TOMA / PRESSOSTATO GAS	CAVO + CONNETT. / MANOSTATO GAS	1

07/2015-R8220064-420010666000A

	6XXXXXXX	DE NL	FR ES	IT	X
1604	65301034	KABEL M. STECKER F. GADRUCKWAECHTER KABEL + STEKKER / GASDRUKBEWAKER	CABLE EQUIPE MANOSTAT GAZ CABLE + TOMA/MANOSTATO DE GAS	CAVO + PRESA / MANOSTATO GAS	1
1610	65301020	KABEL M. STECKER / GASVENTIL KABEL + STEKKER GASKLEP	CABLE + CONNECT. / VANNE GAZ CABLE+ TOMA/VALVULA GAS	CAVO + CONNETT. / VALVOLA GAS	1
1620	65300997	KABEL M.STECKER ZUENDTRAFO KABEL + STEKKER / ONTSTEKER	CABLE ALLUMEUR CABLE+TOMA/ENCENDEDOR	CAVO TRASFORMATORE ACCENS.	1
1630	65301058	KABEL M. STECKER F. IR DETEKTOR KABEL + STEKKER VAN DE IRD FOTOCEL	CABLE EQ.3P.+CABLE/CELLULE IRD CABLE + TOMA/DETECTOR DE LLAMA IRD	CAVO + PRESA/RILEVATORE DI FIAMMA IRD	1
1640	65301035	FOTOZELLE IRD 1020.1 WEISS AXIAL FOTOCEL IRD 1020.1 WIT AXIAL	CELLULE IRD 1020.1 BLANC AXIAL CELULA IRD 1020.1 BLANCO AXIAL	CELLULA IRD 1020.1 BIANCO AXIAL	1
1650	13010461	FOTOZELLENHALTER M93 ZU IRD1020.1 STEUN FOTOCEL M93 VOOR IRD1020.1	SUPPORT CELLULE M93 POUR IRD1020.1 SOPORTE M93 DE LA CELULA IRD1020.1	SOSTEGNO RIVELAT. M93 PER IRD1020.1	1
1660	65301000	KABEL L560+STECKER 4P/MOTOR KABEL L560+STEKKER 4P/MOTOR	CABLE L560+PRISE 4P/MOTEUR CABLE L560+TOMA 4P/MOTOR	CAVO LUNGH. 560MM + PRESA 4 POLI/MOTORE	1
1670	13009743	ZÜNDKABEL ONTSTEKINGSKABEL	CABLE ALLUMAGE CABLE ENCENDIDO	CAVO ACCENSIONE	1
1700	65300881	FEUERUNGSAUTOMAT TCG 511.01TC BRANDERAUTOMAAT TCG 511.01TC	COFFRET TCG 511.01TC PROGRAMADOR TCG 511.01TC	APPARECCHIATURA TCG 511.01TC	1
1800	13009778	SCHALTSCHÜTZ SCHAKELAAR	CONTACTEUR CONTACTOR	CONTATTORE	1
1810	13009746	MOTORSCHUTZRELAIS LR2K 5.5-8.0A THERMISCH RELAIS LR2K 5,5-8,0A	RELAIS THERMIQUE LR2K 5.5-8.0A RELÉ TÉRMICO LR2K 5.5-8.0A	RELÈ TERMICO LR2K 5.5-8.0A	1
2100	65301027	STERNGASKOPF KPL. MONTIERT T1/KN GASLIJN COMPLEET T1/KN	LIGNE GAZ EQUIPEE T1/KN LÍNEA DE GAS EQUIPADA T1/KN	LINEA GAS COMPLETA T1/KN	1
	65301028	STERNGASKOPF KPL. MONTIERT T2/KL GASLIJN COMPLEET T2/KL	LIGNE GAZ EQUIPEE T2/KL LÍNEA DE GAS EQUIPADA T2/KL	LINEA GAS COMPLETA T2/KL	1
	65301029	STERNGASKOPF KPL. MONTIERT T3/KM GASLIJN COMPLEET T3/KM	LIGNE GAZ EQUIPEE T3/KM LÍNEA DE GAS EQUIPADA T3/KM	LINEA GAS COMPLETA T3/KM	1
2110	65301030	GASKOPF-SET GAS VERSTUIVEREENHEID	ENSEMBLE TETE GAZ CONJUNTO DIFUSOR DE GAS	GRUPPO TESTA GAS	1
2120	13009726	ELEKTRODENBLOCK ELEKTRODEBLOK	BLOC-ELECTRODES BLOQUE-ELECTRODOS	BLOCCO ELETTRODI	1
2130	13010049	ANSATZSCHRAUBE M4/ELEKTRODENBLOCK KRAAGSCHROEF M4/ELEKTRODEBLOK	VIS EPAULEE M4/BLOC-ELECTRODES TORN.ALLEN M4/BLOQUE-ELECTRODOS	VITE CON SPALLAMENTO M4/BLOCCO ELETTRODI	1
2131	13009725	FEDERBÜGEL/ELEKTRODENBLOCK FLENS VEER/ELEKTRODEBLOK	BRIDE RESSORT/BLOC-ELECTRODES BRIDA RESORTE/BLOQUE-ELECTRODOS	FLANGIA MOLLA/BLOCCO ELETTRODI	1
2150	65301117	GASROHR LG.506 ELLEBOOG GAS+BUIS LG.506	COUDE GAZ+TUBE LG.506 CODO GAS LG.506	GOMITO GAS+TUBO LG.506	1
	65301118	GASROHR LG.706 ELLEBOOG GAS+BUIS LG.706	COUDE GAZ+TUBE LG.706 CODO GAS LG.706	GOMITO GAS+TUBO LG.706	1
	65301119	GASROHR LG.606 ELLEBOOG GAS+BUIS LG.606	COUDE GAZ+TUBE LG.606 CODO GAS LG.606	GOMITO GAS+TUBO LG.606	1
2160	65301120	DRALLKOERPER WERVELKRANS	TURBULATEUR TURBULENCIADOR	VORTICIZZATORE	1
2180	13009727	ZÜNDKABEL L950 ONTSTEKINGSKABELS L950	CABLES ALLUMAGE L950 CABLES ENCENDIDO L950	CAVI ACCENSIONE L950	1
2190	13009731	O-RING D.75X4 O-RING D.75X4	O'RING D.75X4 JUNTA TÓRICA D.75X4	O'RING D.75X4	1
2200	65301031	FLAMMENROHR D227/157 L380 BRANDERBUIS D227/157 L380	TUBE DE FLAMME D227/157 L380 TUBO DE LLAMA D227/157 L380	BOCCAGLIO D227/157 L380	1
	65301032	FLAMMENROHR D227/157 L623 BRANDERBUIS D227/157 L623	TUBE DE FLAMME D227/157 L623 TUBO DE LLAMA D227/157 L623	BOCCAGLIO D227/157 L623	1
	65301033	FLAMMENROHR D227/157 L530 BRANDERBUIS D227/157 L530	TUBE DE FLAMME D227/157 L530 TUBO DE LLAMA D227/157 L530	BOCCAGLIO D227/157 L530	1
2210	13009723	BEF.SCHRAUBENKIT BRENNERROHR (X3) KIT BEV.SCHROEF BRANDERBUIS (X3)	KIT VIS FIX. TUBE BRULEUR (X3) KIT TORN.FIJ. TUBO QUEMADOR (X3)	KIT VITI FISS. TUBO BRUCIATORE (X3)	1
2300	13009719	DICHTUNG/KESSELTÜR 326X335X3 DICHTING KLINGERIT 326X335X3	JOINT/FAÇADE CHAUDIERE 326X335X3 JUNTA/FRENTE CALDERA 326X335X3	GUARN./LATO FRONTALE CALDAIA 326X335X3	1
2330	65300252	DRUCKROHR/FEUERRAUM LG. 250MM BUIS KAMERDRUK LG. 250MM	TUBE PRESSION FOYER LG. 250MM TUBO DE PRESIÓN DEL HOGAR LG. 250MM	TUBO PRESSIONE CAMERA LG. 250MM	1
	65300597	DRUCKROHR/FEUERRAUM LG. 350MM BUIS KAMERDRUK LG. 350MM	TUBE PRESSION FOYER LG. 350MM TUBO DE PRESIÓN DEL HOGAR LG. 350MM	TUBO PRESSIONE CAMERA LG. 350MM	1
2350	65300854	BEFESTIGUNGSSCHRAUBE+MUTTER M12X80 BEVESTIGINGSSCHROEF+MOER M12X80	VIS DE FIXATION+ECROU M12X80 TORNILLO DE FIJACIÓN+TUERCA M12X80	VITE DI FISSAGGIO+DADO M12X80	1
2360	13022998	STEHBOLZEN-SET M12X40+MUTTER SET TAPEINDEN M12X40+MOER	KIT GOUJONS M12X40+ECROU KIT PASADORES M12X40+TUERCA	SET PRIGIONIERI M12X40+DADO	1
2420	13009724	ACHSENKIT KIT ASSEN	KIT AXES KIT EJES	KIT ASSI	1
3005	13014122	MONTIERTER KOLLEKTOR RP 1¨1/4 COLLECTOR GEMONTEERD RP 1¨1/4	COLLECTEUR MONTE RP 1¨1/4 COLECTOR MONTADO RP 1¨1/4	COLLETTORE MONTATO RP 1¨1/4	1
	13014128	MONTIERTER KOLLEKTOR RP 2 COLLECTOR GEMONTEERD RP 2	COLLECTEUR MONTE RP 2 COLECTOR MONTADO RP 2	COLLETTORE MONTATO RP 2	1

	6XXXXXXX	DE NL	FR ES	IT	X
3006	13011367	STABILISATOR+SICHERUNGSRING D.60 STABILISATOR+ BORGVEREN D.60	STABILISATEUR+ CIRCLIPS D.60 ESTABILIZADOR+ ANILLO DE RETÉN D.60	STABILIZZATORE+ANELLI ELASTICI D.60	1
3007	13009722	MESSNIPPEL R1/8 DRUKAANSLUITING R1/8	PRISE PRESSION R1/8 TOMA PRESIÓN R1/8	PRESA PRESSIONE R1/8	1
3022	13020682	SCHWENKVERSCHRAUBUNG LCK-G1/8-PK4 ¨BANJO¨ AANSLUITING LCK-G1/8-PK4	RACCORD BANJO LCK-G1/8-PK4 RACOR TIPO ¨BANJO¨ LCK-G1/8-PK4	RACCORDO "BANJO" LCK-G1/8-PK4	1
3040	13007859	FLANSCH MB...420 RP2+STECKER P FLENS MB...420 RP2+DRUKAANSL.	BRIDE MB...420 RP2+PRISE P BRIDA MB...420 RP2+TOMA P	FLANGIA MB...420 RP2+PRESA P	1
	13010085	EINGANGSFLANSCH MB410/412 AANSLUITFLENS MB410/412	BRIDE D'ENTRÉE MB410/412 BRIDA ENTRADA MB410/412	FLANGIA INGRESSO MB410/412	1
3100	65301036	GASVENTIL MBVEF412 B01 S32 RP1"1/4 GASKLEP MBVEF412 B01 S32 RP1"1/4	VANNE GAZ MBVEF412 B01 S32 RP1"1/4 VALVULA GAS MBVEF412 B01 S32 RP1"1/4	VALVOLA GAS MBVEF412 B01 S32 RP1"1/4	1
	65301037	GASVENTIL MBVEF420 B01 S32 RP2" GASKLEP MBVEF420 B01 S32 RP2"	VANNE GAZ MBVEF420 B01 S32 RP2" VALVULA GAS MBVEF420 B01 S32 RP2"	VALVOLA GAS MBVEF420 B01 S32 RP2"	1
3110	13010078	GASDRUCKWÄCHTER GW 150 A5 30-150MB DIN GASDRUKREGELAAR GW 150 A5 30-150MB DIN	MANOSTAT GAZ GW 150 A5 30-150MB DIN MANOSTATO GAS GW 150 A5 30-150MB DIN	PRESSOSTATO GAS GW 150 A5 30-150MB DIN	1
3120	13010084	SPULE DUN N° 1205 MBVEF412 SPOEL DUN NR. 1205 MBVEF412	BOBINE DUN N° 1205 MBVEF412 BOBINA DUN N° 1205 MBVEF412	BOBINA DUN N° 1205 MBVEF412	1
	13011726	SPULE DUN N° 1215 MBVEF420 SPOEL DUN NR. 1215 MBVEF420	BOBINE DUN N° 1215 MBVEF420 BOBINA DUN N° 1215 MBVEF420	BOBINA DUN N° 1215 MBVEF420	1
3130	65323019	GASDRUCKWACHTER GW 50 A5 2,5-50MB GASDRUKSCHAKELAAR GW 50 A5 2,5-50MB	MANOSTAT GAZ GW 50 A5 2,5-50MB PRESOSTATO GAS GW 50 A5 2,5-50MB	PRESSOSTATO GAS GW 50 A5 2,5-50MB	1
3140	13007901	FILTERELEMENT /MB...420 FILTERELEMENT /MB...420	ELEMENT FILTRANT /MB...420 ELEMENTO FILTRANTE /MB...420	ELEMENTO FILTRANTE /MB...420	1
	13016012	FILTERELEMENT /MB...410/412 FILTERELEMENT /MB...410/412	ELEMENT FILTRANT /MB...410/412 ELEMENTO FILTRANTE /MB...410/412	ELEMENTO FILTRANTE /MB...410/412	1
3150	65300649	DRUCKABNAHMEROHR MBVEF412 GASDRUKBUIS MBVEF412+AANSLUITING	TUBE PRESSION GAZ MBVEF412+RACCORD TUBO DE PRESIÓN GAS MBVEF412+EMPALME	TUBO DELLA PRESSIONE GAS MBVEF412	1
	65300669	DRUCKABNAHMEROHR MBVEF420 GASDRUKBUIS MBVEF420+AANSLUITING	TUBE PRESSION GAZ MBVEF420+RACCORD TUBO DE PRESIÓN GAS MBVEF420+EMPALME	TUBO DELLA PRESSIONE GAS MBVEF420	1
3160	13023188	WINKELVERSCHRAUBUNG GEBOGEN AANSLUITING	RACCORD COUDE RACOR ACODADO	RACCORDO A GOMITO	1
3170	13023187	VERSCHRAUBUNG G1/8 + DICHTUNG AANSLUITING G1/8 + AFDICHTING	RACCORD G1/8+JOINT RACOR G1/8 + JUNTA	RACCORDO G1/8 + GUARNIZIONE	1
3200	65300576	O'RING SET MB...412 PAKKINGSET MB...412	KIT JOINTS MB...412 KIT DE JUNTAS MB...412	KIT GUARNIZIONI MB...412	1
	65300671	DICHTUNGSKIT MB...420 DICHTINGSKIT MB...420	KIT JOINTS MB...420 KIT JUNTAS MB...420	KIT GUARNIZIONI...420	1
3410	13009700	EXTERNER GASFILTER RP2 FILTER GAS EXTERN RP2	FILTRE GAZ EXTERNE RP2 FILTRO GAS EXTERNO RP2	FILTRO GAS ESTERNO RP2	1
3411	13010044	FILTERELEMENT RP2+DICHTUNG FILTERELEMENT RP2+DICHTING	ELEMENT FILT. RP2+JOINT ELEMENTO FILT. RP2+JUNTA	ELEMENTO FILT. RP2+GUARNIZIONE	1
4005	65301024	GASANSCHLUSSROHR RP2 GASAANSLUITBUIS CPL. RP2	COLLECTEUR COMPLET RP2 COLECTOR GAS CPL RP2	COLLETTORE RP2	1
4006	13011367	STABILISATOR+SICHERUNGSRING D.60 STABILISATOR+ BORGVEREN D.60	STABILISATEUR+ CIRCLIPS D.60 ESTABILIZADOR+ ANILLO DE RETÉN D.60	STABILIZZATORE+ANELLI ELASTICI D.60	1
4007	13009722	MESSNIPPEL R1/8 DRUKAANSLUITING R1/8	PRISE PRESSION R1/8 TOMA PRESIÓN R1/8	PRESA PRESSIONE R1/8	1
4022	13020682	SCHWENKVERSCHRAUBUNG LCK-G1/8-PK4 ¨BANJO¨ AANSLUITING LCK-G1/8-PK4	RACCORD BANJO LCK-G1/8-PK4 RACOR TIPO ¨BANJO¨ LCK-G1/8-PK4	RACCORDO "BANJO" LCK-G1/8-PK4	1
4030	13020958	ANSCHLUSSKABEL SKP VERBINDINGSKABEL SKP	CABLE DE LIAISON SKP CABLE DE CONEXIÓN SKP	CAVO DI COLLEGAMENTO SKP	1
4040	65300871	EINGANGSFLANSCH AGA51 AANSLUITFLENS AGA51	BRIDE D'ENTRÉE AGA51 BRIDA ENTRADA AGA51	FLANGIA INGRESSO AGA51	1
4100	65311581	GASVENTIL VGD20 5011 RP2'' GASKLEP VGD20 5011 RP2''	VANNE GAZ VGD20 5011 RP2'' VALVULA GAS VGD20 5011 RP2''	VALVOLA GAS VGD20 5011 RP2''	1
4102	13020950	SERVOMOT. GAS SKP75.003E2 O.ENDSCHALTER SERVOMOT. GAS SKP75.003E2 Z.EINDSCHAK.	SERVOMOT. GAZ SKP75.003E2 S.FIN COURSE SERVOMOT. GAS SKP75.003E2 S.TOPE	SERVOMOT. GAS SKP75.003E2 S.FINECORSA	1
4105	13020951	SERVOMOT. GAS SKP15.000E2 O.ENDSCHALTER SERVOMOT. GAS SKP15.000E2 Z.EINDSCHAK.	SERVOMOT. GAZ SKP15.000E2 S.FIN COURSE SERVOMOT. GAS SKP15.000E2 S.TOPE	SERVOMOT. GAS SKP15.000E2 S.FINECORSA	1
4110	13010078	GASDRUCKWÄCHTER GW 150 A5 30-150MB DIN GASDRUKREGELAAR GW 150 A5 30-150MB DIN	MANOSTAT GAZ GW 150 A5 30-150MB DIN MANOSTATO GAS GW 150 A5 30-150MB DIN	PRESSOSTATO GAS GW 150 A5 30-150MB DIN	1
4130	65323019	GASDRUCKWACHTER GW 50 A5 2,5-50MB GASDRUKSCHAKELAAR GW 50 A5 2,5-50MB	MANOSTAT GAZ GW 50 A5 2,5-50MB PRESOSTATO GAS GW 50 A5 2,5-50MB	PRESSOSTATO GAS GW 50 A5 2,5-50MB	1
4150	65301075	GASDRUCKROHR VGD20 RP2 NC95/210-VG5/6 GASDRUIKBUIS VGD20 RP2 NC95/210-VG5/6	TUBE PRES.GAZ VGD20 RP2 NC95/210-VG5/6 TUBO PR. GAS VGD20 RP2 NC95/210-VG5/6	TUBO PRES.GAS VGD20 RP2 NC95/210-VG5/6	1
4160	13023188	WINKELVERSCHRAUBUNG GEBOGEN AANSLUITING	RACCORD COUDE RACOR ACODADO	RACCORDO A GOMITO	1
4170	13009721	GERADES ANSCHLUSSSTÜCK VERBINDING RECHT	RACCORD DROIT EMPALME RECTO	RACCORDO DESTRO	1
4200	13011733	DICHTUNGSKIT VGG,VGF10/VGD20 RP2 DICHTINGSKIT VGG,VGF10/VGD20 RP2	KIT JOINTS VGG,VGF10/VGD20 RP2 KIT JUNTAS VGG,VGF10/VGD20 RP2	KIT GUARNIZIONI VGG,VGF10/VGD20 RP2	1

	6XXXXXXX	DE NL	FR ES	IT	X
4410	13009700	EXTERNER GASFILTER RP2 FILTER GAS EXTERN RP2	FILTRE GAZ EXTERNE RP2 FILTRO GAS EXTERNO RP2	FILTRO GAS ESTERNO RP2	1
4411	13010044	FILTERELEMENT RP2+DICHTUNG FILTERELEMENT RP2+DICHTING	ELEMENT FILT. RP2+JOINT ELEMENTO FILT. RP2+JUNTA	ELEMENTO FILT. RP2+GUARNIZIONE	1
4505	65301022	GASANSCHLUSSROHR DN65 GASAANSLUITBUIS CPL. DN65	COLLECTEUR COMPLET DN65 COLECTOR GAS CPL DN65	COLLETTORE DN65	1
	65301023	GASANSCHLUSSROHR DN80 GASAANSLUITBUIS CPL. DN80	COLLECTEUR COMPLET DN80 COLECTOR GAS CPL DN80	COLLETTORE DN80	1
4506	13011367	STABILISATOR+SICHERUNGSRING D.60 STABILISATOR+ BORGVEREN D.60	STABILISATEUR+ CIRCLIPS D.60 ESTABILIZADOR+ ANILLO DE RETÉN D.60	STABILIZZATORE+ANELLI ELASTICI D.60	1
4507	13009722	MESSNIPPEL R1/8 DRUKAANSLUITING R1/8	PRISE PRESSION R1/8 TOMA PRESIÓN R1/8	PRESA PRESSIONE R1/8	1
4522	13020682	SCHWENKVERSCHRAUBUNG LCK-G1/8-PK4 ¨BANJO¨ AANSLUITING LCK-G1/8-PK4	RACCORD BANJO LCK-G1/8-PK4 RACOR TIPO ¨BANJO¨ LCK-G1/8-PK4	RACCORDO “BANJO” LCK-G1/8-PK4	1
4530	13020958	ANSCHLUSSKABEL SKP VERBINDINGSKABEL SKP	CABLE DE LIAISON SKP CABLE DE CONEXIÓN SKP	CAVO DI COLLEGAMENTO SKP	1
4600	65311583	GASVENTIL VGD40 080 DN80 GASKLEP VGD40 080 DN80	VANNE GAZ VGD40 080 DN80 VALVULA GAS VGD40 080 DN80	VALVOLA GAS VGD40 080 DN80	1
	65323661	GASVENTIL VGD40 065 DN65 GASKLEP VGD40 065 DN65	VANNE GAZ VGD40 065 DN65 VÁLVULA GAS VGD40 065 DN65	VALVOLA GAS VGD40 065 DN65	1
4602	13020950	SERVOMOT. GAS SKP75.003E2 O.ENDSCHALTER SERVOMOT. GAS SKP75.003E2 Z.EINDSCHAK.	SERVOMOT. GAZ SKP75.003E2 S.FIN COURSE SERVOMOT. GAS SKP75.003E2 S.TOPE	SERVOMOT. GAS SKP75.003E2 S.FINECORSA	1
4605	13020951	SERVOMOT. GAS SKP15.000E2 O.ENDSCHALTER SERVOMOT. GAS SKP15.000E2 Z.EINDSCHAK.	SERVOMOT. GAZ SKP15.000E2 S.FIN COURSE SERVOMOT. GAS SKP15.000E2 S.TOPE	SERVOMOT. GAS SKP15.000E2 S.FINECORSA	1
4610	13010078	GASDRUCKWÄCHTER GW 150 A5 30-150MB DIN GASDRUKREGELAAR GW 150 A5 30-150MB DIN	MANOSTAT GAZ GW 150 A5 30-150MB DIN MANOSTATO GAS GW 150 A5 30-150MB DIN	PRESSOSTATO GAS GW 150 A5 30-150MB DIN	1
4630	65323019	GASDRUCKWACHTER GW 50 A5 2,5-50MB GASDRUKSCHAKELAAR GW 50 A5 2,5-50MB	MANOSTAT GAZ GW 50 A5 2,5-50MB PRESOSTATO GAS GW 50 A5 2,5-50MB	PRESSOSTATO GAS GW 50 A5 2,5-50MB	1
4650	65301025	GASDRUCKROHR VGD40 DN65 NC95/210-VG5/6 GASDRUKBUIS VGD40 DN65 NC95/210-VG5/6	TUBE PR.GAZ EQ.VGD40 DN65 NC95/210-VG5/6 TUBO PR. GAS VGD40 DN65 NC95/210-VG5/6	TUBO PR.GAS CPL.VGD40DN65 NC95/210-VG5/6	1
	65301026	GASDRUCKROHR VGD40 DN80 NC210-VG6 GASDRUKBUIS VGD40 DN80 NC210-VG6	TUBE PRES.GAZ EQ.VGD40 DN80 NC210-VG6 TUBO PR. GAS VGD40 DN80 NC210-VG6	TUBO PR.GAS CPL.VGD40 DN80 NC210-VG6	1
4660	13023188	WINKELVERSCHRAUBUNG GEBOGEN AANSLUITING	RACCORD COUDE RACOR ACODADO	RACCORDO A GOMITO	1
4670	13009721	GERADES ANSCHLUSSSTÜCK VERBINDING RECHT	RACCORD DROIT EMPALME RECTO	RACCORDO DESTRO	1
4700	13013781	DICHTUNGSKIT VGD40 DN65 DICHTINGSKIT VGD40 DN65	KIT JOINTS VGD40 DN65 KIT JUNTAS VGD40 DN65	KIT GUARNIZIONI VGD40 DN65	1
	13013782	DICHTUNGSKIT VGD40 DN80 DICHTINGSKIT VGD40 DN80	KIT JOINTS VGD40 DN80 KIT JUNTAS VGD40 DN80	KIT GUARNIZIONI VGD40 DN80	1
4910	13009703	EXTERNER GASFILTER DN65 FILTER GAS EXTERN DN65	FILTRE GAZ EXTERNE DN65 FILTRO GAS EXTERNO DN65	FILTRO GAS ESTERNO DN65	1
	13013787	GASFILTER DN80 FILTER GAS DN80	FILTRE GAZ DN80 FILTRO GAS DN80	FILTRO GAS DN80	1
4911	13009704	GASFILTERELEMENT DN65 MIT DICHTUNG FILTERELEMENT GAS DN65 MET DICHTING	ELEMENT FILTRANT GAZ DN65 AVEC JOINT ELEMENTO FILTRANTE GAS DN65 CON JUNTA	ELEMENTO FILTRANTE GAS DN65 CON GUARNIZ.	1
	13013788	GASFILTERELEMENT DN80 MIT DICHTUNG FILTERELEMENT GAS DN80 MET DICHTING	ELEMENT FILTRANT GAZ DN80 AVEC JOINT ELEMENTO FILTRANTE GAS DN80 CON JUNTA	ELEMENTO FILTRANTE GAS DN80 CON GUARNIZ.	1

	6XXXXXXX	RU TR	PT	PL	X
1005	13009640	УПЛОТНЕНИЕ ВОЗДУХОЗАБОРНИКА HAVA KUTUSU CONTASI	JUNTA CAIXA DE AR	USZCZELKA SKRZYNKI POWIETRZA	1
1010	13009642	КРЫШКА ВОЗДУХОЗАБОРНИКА HAVA KUTUSU KAPAĞI	TAMPA REGISTRO DE AR	POKRYWA SKRZYNKI POWIETRZA	1
1020	13009641	ИЗОЛЯЦИЯ ВОЗДУХОЗАБОРНИКА HAVA KUTUSU YALITIMI	ISOLAMENTO CAIXA DE ENTRADA DE AR	USZCZELKA SKRZYNKI POWIETRZA	1
1040	65301001	СЕРВОДВИГАТЕЛЬ STE 4,5 Q3.51/6 3NM R SERVOMOTOR STE 4,5 BO37/6	ATUADOR STE 4,5 Q3.51/6 R 3NM	SERWOMOTOR STE 4,5 Q3.51/6 R 3NM	1
1050	13014117	ВОЗДУШНАЯ ЗАСЛОНКА В СБОРЕ DONANIMLI HAVA KAPAKÇIĞI	CONJUNTO ALETA DE AR	ZASŁONA POWIETRZA Z WYPOSAŻENIEM	1
1051	65326227	ВОЗДУШНАЯ ЗАСЛОНКА В СБОРЕ DONANIMLI HAVA KLAPESI	FLAP DE AR EQUIP.	PRZEPUSTNICA POWIETRZA Z OSPRZĘTEM	1
1060	13011751	ПРУЖИНА СЕРАЯ/ВОЗД. GRİ/ HAVA YAYI	MOLA ALETA DE AR (CINZENTA)	RESOR SZARY/ POW	1
1070	65301070	СОЕДИНЕНИЕ В СБОРЕ DONANIMLI BAĞLANTI	ACOPLAMENTO COMPLETO	SPRZĘGŁO Z OSPRZĘTEM	1
1071	65326226	ДЕРЖАТЕЛЬ СЕРВОДВИГАТЕЛЬ DESTEĞI SERVOMOTOR	SUPORTE SERVOMOTOR	WSPORNIK SERWOMOTOR	1
1080	13010055	УПЛОТНЕНИЕ КОЖУХА KARTER CONTASI	JUNTA CAIXA	USZCZELKA KARTERA	1
1090	13016845	МУФТА ПРОПУСКА ПРОВОДА/КАРТЕР KABLO KANALI/KARTER	PASSA-CABOS/CAIXA	PRZELOTKA PRZEWODU/OBUDOWA	1
1100	65301016	ЧЕХОЛ VECTRON5+ V6 +ВИНТ КРЕПЛЕНИЯ DONANIMLI MUHAFAZA KAPAĞI VECTRON5 / V6	EXTRATOR VECTRON5 E V6+PARAFUSO FIXAÇÃO	POKRYWA VECTRON5 I V6 Z OSPRZĘTEM	1
1101	65300519	ВИНТ С ПЛОСКОЙ ГОЛОВКОЙ M5X15 DÜZ BAŞLI VIDA M5X15	PARAFUSO CABEÇA PLANA M5X15	ŚRUBA Z ŁBEM NITOWYM PŁASKIM M5X15	1
1102	13009772	УПЛОТНИТЕЛЬНАЯ ЛЕНТА/КОЖУХ YALITIM BANDI / GÖVDE KAPLAMA	BANDA DE VEDAÇÃO EXAUSTOR	TAŚMA USZCZELNIAJĄCA/POKRYWA	1
1140	13010008	СМОТРОВОЕ СТЕКЛО RÖGAR CAMI	VIGIA	SZKŁO PODGLĄDU	1
1145	13009648	ПРОХОДНАЯ ВТУЛКА ДЛЯ ПРОВОДА KABLO GEÇİRİCİ	PASSA-CABOS	PRZELOT KABLI	1
1170	13009748	ВОЗДУШНЫЙ ВЫПРЯМИТЕЛЬ HAVA DÜZELTİCİ	RECICLAGEM DE AR	PROSTOWNIK POWIETRZA	1
1180	13009738	ДАТЧИК ДАВЛЕНИЯ BASINÇ GİRİŞİ	TORNEIRA DE PRESSÃO	GNIAZDO CIŚNIENIOWE	1
1190	13009649	РАБОЧЕЕ КОЛЕСО D240X82 d19 TÜRBİN D240X82 d19	TURBINA D240X82 d19	WIMIK D240X82 d19	1
	13009736	ТУРБИНА D240X114 d24 D240X114 d24 TÜRBİN	TURBINA D240X114 d24	WIMIK D240X114 d24	1
	13009737	ТУРБИНА D250X114 d24 D250X114 d24 TÜRBİN	TURBINA D250X114 d24	WIMIK D250X114 d24	1
1200	13020723	КРОНШТЕЙН ПНЕВМОРЕЛЕ Д32 HAVA BASINÇ ŞALTERI MESNEDI D32	BASE MANÓSTATO AR D32	WSPORNIK CZUJNIKA CIŚNI. POWIET. D32	1
1210	65300991	РЕЛЕ ДАВЛЕНИЯ ВОЗДУХ HUBA 604 1-10MBAR HAVA BASINÇ ŞALTERI HUBA 604 1-10MBAR	MANÓSTATO DE AR 604 1-10MBAR	CZUJNIK CIŚNIENIA POWIETR. HUBA 604 1-10	1
1220	13009654	ДВИГАТЕЛЬ 1,5 кВт 230/400 В D19 + РАЗЪЕМ 1,5KW230/400V D19 MOTOR +PRİZ	MOTOR 1,5KW230/400V D19+PLUGUE	SILNIK 1,5 KW 230/400 V D19+GNIAZDO	1
	13009739	ДВИГАТЕЛЬ 2,2KW230/400V D24+РАЗЪЕМ MOTOR 2,2KW230/400V D24+PRİZ	MOTOR 2,2KW230/400V D24+PLUGUE	SILNIK 2,2 KW 230/400 V D24 + GNIAZDO	1
	13009740	ДВИГАТЕЛЬ 2,5KW230/400V D24+РАЗЪЕМ MOTOR 2,5KW230/400V D24+PRİZ	MOTOR 2,5KW230/400V D24+PLUGUE	SILNIK 2,5 KW 230/400 V D24 + GNIAZDO	1
1510	13009663	ЗАПАЛЬНИК EBI 2X7,5 230 В 2X7,5 230V EBİ ATEŞLEYİCİ	ACENDEDOR EBI 2X7,5 230V	ZAPALNIK EBI 2X7,5 230 V	1
1520	13016457	ДЕРЖАТЕЛЬ ПРЕДОХР-ЛЯ + ПРЕДОХР-ЛЬ 6,3 А SİGORTA TAŞIYICI + 6.3A SİGORTA	PORTA-FUSÍVEL+FUSÍVEL 6,3A	OPRAWA BEZPIECZNIKOWA +BEZPIECZNIK 6,3 A	1
1525	13016028	ПРЕДОХРАНИТЕЛЬ 5X20 6.3A SIGORTA 5X20 6.3A	FUSÍVEL 5X20 6,3A	BEZPIECZNIKA 5X20 6.3A	1
1530	13010007	ПЕРЕКЛЮЧАТЕЛЬ ŞALTER	INTERRUPTOR LIGAR/DESLIGAR	PRZEŁĄCZNIK	1
1540	13014009	ПЕРЕКЛЮЧАТЕЛЬ ŞALTER	INTERRUPTOR - FUNCIONAMENTO	PRZEŁĄCZNIK	1
1550	65301109	ДИСПЛЕЙ БЛОК УПРАВЛЕНИЯ TCG-TCH REL. 2.2 EKRAN IÇIN KUTU TCG-TCH REL. 2.2	VISOR UNIDADE CONTROLE TCG-TCH REL.2.2	WYŚWIETLACZ / MODUŁ TCG-TCH REL.2.2	1
1560	65300992	ПУЛЬТ УПРАВЛЕНИЯ ПЛАСТИКОВЫЙ İŞLETIM MASASI PLASTIK	PLACA DE CONTROLE PLÁSTICA	PLASTIKOWY PULPIT STEROWNICZY	1
1570	65300993	МУФТА ПРОКЛАДКИ ПРОВОДА Д54/Д47/Д36 KABLO KANALI D54/D47/D36	PASSA-CABOS D54/D47/D36	PRZELOTKA PRZEWODU D54/D47/D36	1
1580	13009661	ЗАТВОР/ПУЛЬТ TAPA / KONTROL PANELİ	OBTURADOR INTERFACE	PRZEPUSTNICA / PULPIT	1
1600	65301019	КАБЕЛЬ+РАЗЪЕМ РЕЛЕ ДАВЛЕНИЯ ГАЗА KABLOSU + PRİZ / GAZ BASINÇ ŞALT.	CABO+CONECTOR / PRESSOSTATO GÁS	PRZEWÓD+WTYCZKA CZUJNIKA CIŚNI. GAZU	1

07/2015-R8220064-420010666000A

	6XXXXXXX	RU TR	PT	PL	X
1604	65301034	КАБЕЛЬ РЕЛЕ ДАВЛЕНИЯ ГАЗА KABLOSU + KONEKTÖRÜ/GAZ BASINÇ ŞALT.	CABO+CONECTOR PRESSOSTATO DE GÁS	PRZEWÓD CZUJNIKA CIŚNIENIA GAZU	1
1610	65301020	КАБЕЛЬ+РАЗЪЕМ ГАЗОВОГО КЛАПАНА KABLOSU + PRİZ / GAZ VANASI	CABO+CONECTOR / VÁLVULA DE GÁS	PRZEWÓD+WTYCZKA ZAWORU GAZOW.	1
1620	65300997	КАБЕЛЬ / ТРАНСФО РОЗЖИГА KABLOSU / ATEŞLEME TRAFO.	CABO/ACENDEDOR	PRZEWÓD+GNIAZDO/APARAT ZAPŁONOWY	1
1630	65301058	КАБЕЛЬ + РАЗЪЕМ /ФОТОРЕЗИСТОР IRD KABLOSU + PRİZ / HÜCRE IRD	CABO + CONECTOR /FOTOCÉLULA IRD	PRZEWÓD + GNIAZDO /FOTOKOMÓRKA IRD	1
1640	65301035	ФОТОРЕЗИСТОР IRD.1020.1 БЛАН+КРОНШТЕЙН HÜCRE IRD 1020.1 AXIAL	FOTOCÉLULA IRD 1020.1 BRANCO AXIAL	FOTOKOMÓRKA IRD 1020.1 WHITE AXIAL	1
1650	13010461	ДЕРЖАТЕЛЬ ДЛЯ ФОТОЭЛЕМЕНТА IRD1020.1 HÜCRE MESNEDI M93 İÇİN IRD1020.1	SUPORTE FOTOCÉLULA M93 PARA IRD1020.1	WSPORNIK DLA FOTOKOMÓRKA IRD1020.1	1
1660	65301000	КАБЕЛЬ L560+РАЗЪЕМ 4-ПОЛЮС/ДВИГАТЕЛЬ L560 KABLO +PRİZ 4P/MOTOR	CABO C.560+CONECTOR 4P/MOTOR	KABEL L560+GNIAZDO 4P/SILNIK	1
1670	13009743	КАБЕЛЬ РОЗЖИГА ATEŞLEME KABLOSU	CABO DE IGNIÇÃO	KABEL ZAPALNIKA	1
1700	65300881	БЛОК УПРАВЛЕНИЯ TCG 511.01TC KUTU TCG 511.01TC	PROGRAMADOR TCG 511.01TC	MODUŁ TCG 511.01TC	1
1800	13009778	КОНТАКТОР KONTAKTÖR	CONTATOR	KONTAKTOR	1
1810	13009746	ТЕРМОРЕЛЕ LR2K 5.5-8.0A LR2K 5.5-8.0A TERMİL RÖLE	RELÉ TÉRMICO LR2K 5,5-8,0A	PRZEKAŹNIK TERMICZNY LR2K 5,5–8,0 A	1
2100	65301027	АРМАТУРА ГАЗОПРОВОДА T1/KN DONANIMLI GAZ HATTI T1/KN	LINHA DE GÁS COMPLETA T1/KN	UKŁAD CIŚNIENIA GAZU Z WYPO.T1/KN	1
	65301028	АРМАТУРА ГАЗОПРОВОДА T2/KL DONANIMLI GAZ HATTI T2/KL	LINHA DE GÁS COMPLETA T2/KL	UKŁAD CIŚNIENIA GAZU Z WYPOS. T2/KL	1
	65301029	АРМАТУРА ГАЗОПРОВОДА T3/KM DONANIMLI GAZ HATTI T3/KM	LINHA DE GÁS COMPLETA T3/KM	UKŁAD CIŚNIENIA GAZU Z WYPOS. T3/KM	1
2110	65301030	УЗЕЛ ГАЗОВОГО ДИФФУЗОРА GAZ DIFÜZOERÜ GRUBU	CONJUNTO DIFUSOR GÁS	ZESPÓŁ DYSZY GAZU	1
2120	13009726	БЛОК ЭЛЕКТРОДОВ ELEKTROT BLOĞU	BLOCO DE ELÉTRODOS	BLOKADA ELEKTROD	1
2130	13010049	ВИНТ С БУРТИКОМ M4/БЛОК ЭЛЕКТРОДОВ M4 OMUZLU VİDA/ELEKTROT BLOĞU	PARAFUSO M4/BLOCO DE ELÉTRODOS	ŚRUBA M4/BLOKADA ELEKTROD	1
2131	13009725	ПРУЖИНН. ЗАЖИМ / БЛОК ЭЛЕКТРОДОВ ELEKTROT BLOĞU/YAY FLANŞI	FLANGE DE MOLA/BLOCO DE ELÉTRODOS	KOŁNIERZ RESORU/BLOKADA ELEKTROD	1
2150	65301117	ГАЗОВОЕ КОЛЕНО LG.506 GAZ KLAPE LG.506	COTOVELO GÁS+TUBO COMP.506	KOLANKO DO INSTALACJI GAZOWEJ LG.506	1
	65301118	ГАЗОВОЕ КОЛЕНО LG.706 GAZ KLAPE LG.706	COTOVELO GÁS+TUBO COMP.706	KOLANKO DO INSTALACJI GAZOWEJ LG.706	1
	65301119	ГАЗОВОЕ КОЛЕНО LG.606 GAZ KLAPE LG.606	COTOVELO GÁS+TUBO COMP.606	KOLANKO DO INSTALACJI GAZOWEJ LG.606	1
2160	65301120	ЗАВИХРИТЕЛЬ DOENER GOEVDE	GERADOR DE TURBULÊNCIA	ZAWIROWYWACZ	1
2180	13009727	ЗАПАЛЬНЫЕ ПРОВОДА L950 L950 ATEŞLEME KABLOLARI	CABOS IGNIÇÃO L950	KABEL ZAPALNIKA L950	1
2190	13009731	УПЛОТН. КОЛЬЦО D.75X4 O'RING D.75X4	O-RING D.75X4	O'RING D.75X4	1
2200	65301031	СОПЛО ГОРЕЛКИ D227/157 L380 BRÜLÖR BORUSU D227/157 L380	TUBO DO QUEIMADOR D227/157 L380	RURA PALNIKA D227/157 L380	1
	65301032	СОПЛО ГОРЕЛКИ D227/157 L623 BRÜLÖR BORUSU D227/157 L623	TUBO DO QUEIMADOR D227/157 L623	RURA PALNIKA D227/157 L623	1
	65301033	СОПЛО ГОРЕЛКИ D227/157 L530 BRÜLÖR BORUSU D227/157 L530	TUBO DO QUEIMADOR D227/157 L530	RURA PALNIKA D227/157 L530	1
2210	13009723	КОМПЛ-Т ВИНТ КРЕПЛЕН ТРУБЫ ГОРЕЛКИ (X3) BRÜLÖR TÜPÜ TESBİT VİDASI KİTİ (X3)	KIT PARAFUSO FIX. TUBO QUEIMADOR (X3)	ZESTAW ŚRUB MOCOW. RURA PALNIKA (X3)	1
2300	13009719	УПЛОТНЕНИЕ/ПЕРЕДН ЧАСТЬ КОТЛА 326X335X3 326X335X3 KAZAN CONTASI/ÖN YÜZÜ	JUNTA/FRENTE CALDEIRA 326X335X3	USZCZELKA/ŚCIANA CZOŁ. KOTŁA 326X335X3	1
2330	65300252	ТРУ. ОТБОРА ДАВЛ. В ТОПОЧ. КАМЕРЕ L250MM OCAK TERTIBATI BASINÇ BORUSU LG. 250MM	TUBO PRESSÃO FORNALHA COMP. 250MM	PRZEWÓD CIŚNIENIA W PALENISKU LG. 250MM	1
	65300597	ТРУ. ОТБОРА ДАВЛ. В ТОПОЧ. КАМЕРЕ L350MM OCAK TERTIBATI BASINÇ BORUSU LG. 350MM	TUBO PRESSÃO FORNALHA COMP. 350MM	PRZEWÓD CIŚNIENIA W PALENISKU LG. 350MM	1
2350	65300854	КРЕПЕЖНЫЙ ВИНТ+ГАЙКА M12X80 BORUSU BAĞLANTI VIDASI+SOMUN M12X80	PARAFUSO DE FIXAÇÃO+PORCA M12X80	ŚRUBA MOCUJĄCĄ+NAKRĘTKA M12X80	1
2360	13022998	КОМПЛЕКТ ШПИЛЬКИ M12X40+ГАЙКА SAPLAMA TAKIMI M12X40+SOMUN	KIT CAVILHAS M12X40+PORCA	ZESTAW SWORZEŃ M12X40+NAKRĘTKA	1
2420	13009724	КОМПЛЕКТ ПАЛЬЦЕВ AKS KİTİ	KIT EIXOS	ZESTAW OSI	1
3005	13014122	КОЛЛЕКТОР В СБОРЕ RP 1¨1/4 RP 1¨1/4 MONTAJLI KOLEKTÖR	COLETOR MONTADO RP 1¨1/4	KOLEKTOR MONTE RP 1¨1/4	1
	13014128	КОЛЛЕКТОР В СБОРЕ RP 2 RP 2 MONTAJLI KOLEKTÖR	COLETOR MONTADO RP 2	KOLEKTOR MONTE RP 2	1

	6XXXXXXX	RU TR	PT	PL	X
3006	13011367	СТАБИЛИЗАТОР + СТОПОРНОЕ КОЛЬЦО D.60 STABİLİZATÖR + CIRCLIPS D.60	ESTABILIZADOR+ANÉIS RETENÇÃO D.60	STABILIZATOR+ CIRCLIPS D.60	1
3007	13009722	ДАТЧИК ДАВЛЕНИЯ R1/8 R1/8 BASINÇ PRİZİ	TOMADA DE PRESSÃO R1/8	GNIAZDO CIŚNIENIOWE R1/8	1
3022	13020682	ШТУЦЕР ¨БАНДЖО¨ LCK-G1/8-PK4 ¨BANJO¨ RAKOR LCK-G1/8-PK4	CONEXÃO ¨BANJO¨ LCK-G1/8-PK4	ZŁĄCZE ¨BANJO¨ LCK-G1/8-PK4	1
3040	13007859	ФЛАНЕЦ MB...420 RP2 + РАЗЪЕМ P MB...420 RP2 FLANŞ + P PRİZ	FLANGE MB...420 RP2+PLUGUE P	KOŁNIERZ MB...420 RP2+GNIAZDO P	1
	13010085	ВПУСКНОЙ ФЛАНЕЦ MB410/412 MB410/412 GİRİŞ FLANŞI	FLANGE DE ENTRADA MB410/412	KOŁNIERZ WEJŚCIA MB410/412	1
3100	65301036	ГАЗОВЫЙ КЛАПАН MBVEF412 B01 S32 RP1"1/4 GAZ VANASI MBVEF412 B01 S32 RP1"1/4	VÁLVULA GÁS MBVEF412 B01 S32 RP1 1/4	ZAWÓR GAZOWY MBVEF412 B01 S32 RP1"1/4	1
	65301037	ГАЗОВЫЙ КЛАПАН MBVEF420 B01 S32 RP2" GAZ VANASI MBVEF420 B01 S32 RP2"	VALVULA GAS MBVEF420 B01 S32 RP2"	ZAWÓR GAZOWY MBVEF420 B01 S32 RP2"	1
3110	13010078	РЕГУЛ ДАВЛ. ГАЗА. GW 150 A5 30—150MB DIN GW 150 A5 30-150MB DIN GAZ MANOSTATI	PRESSOSTATO GÁS GW 150 A5 30-150MB DIN	CZUJNIK CIŚ. GAZU GW 150 A5 30-150MB DIN	1
3120	13010084	КАТУШКА DUN № 1205 MBVEF412 N° 1205 MBVEF412 DUN BOBİNİ	BOBINA DUN N.º 1205 MBVEF412	CEWKA DUN NR 1205 MBVEF412	1
	13011726	КАТУШКА DUN № 1215 MBVEF420 N° 1215 MBVEF420 DUN BOBİNİ	BOBINA DUN N.º 1215 MBVEF420	CEWKA DUN NR 1215 MBVEF420	1
3130	65323019	РЕЛЕ ДАВ. ВОЗДУХА GW 50 A5 2,5-50MB GAZ BASINÇ ŞALT. GW 50 A5 2,5-50MB	PRESSOSTATO GAS GW 50 A5 2,5-50MB	CZUJNIK CIŚ. GAZU GW 50 A5 2,5-50MB	1
3140	13007901	ФИЛЬТРУЮЩИЙ ЭЛЕМЕНТ/MB...420 FİLTRELEYİCİ ELEMAN /MB...420	ELEMENTO FILTRANTE /MB...420	ELEMENT FILTRUJĄCY /MB...420	1
	13016012	ФИЛЬТР. ЭЛЕМЕНТ/MB...410/412 FİLTRE ELEMANI /MB...410/412	ELEMENTO FILTRANTE /MB...410/412	ELEMENT FILTRUJĄCY /MB...410/412	1
3150	65300649	ТРУБКА ОТБОРА ДАВЛЕНИЯ ГАЗА MBVEF412 GAZ BASINÇ BORUSU MBVEF412+RAKOR.	TUBO DE PRESSÃO GÁS MBVEF412+CONEXÃO	RURA CIŚNIE. GAZU MBVEF412+ZŁĄCZEM	1
	65300669	ТРУБКА ОТБОРА ДАВЛЕНИЯ ГАЗА MBVEF420 GAZ BASINÇ BORUSU MBVEF420+RAKOR.	TUBO DE PRESSÃO GÁS MBVEF420+CONEXÃO	RURA CIŚNIE. GAZU MBVEF420+ZŁĄCZEM	1
3160	13023188	УГЛОВОЙ ШТУЦЕР DIRSEKLI RAKOR	CONEXÃO COTOVELO	ZŁĄCZKA TYPU KOLANKO	1
3170	13023187	ШТУЦЕР G1/8 + УПЛОТНЕНИЕ RAKOR G1/8 + CONTA	CONEXÃO G1/8+JUNTA	ZŁĄCZE G1/8 + USZCZELKA	1
3200	65300576	КОМПЛЕКТ ПРОКЛАДОК MB...412 CONTA KITI MB...412	KIT JUNTAS MB...412	ZESTAW USZCZELEK MB...412	1
	65300671	КОМПЛЕКТ УПЛОТНЕНИЙ MB...420 CONTA KİTİ MB...420	KIT JUNTAS MB...420	ZESTAW USZCZELEK MB...420	1
3410	13009700	ГАЗ ФИЛЬТР ВНЕШНИЙ RP2 RP2 HARİCİ GAZ FİLTRESİ	FILTRO GÁS EXTERNO RP2	FILTR GAZ. ZEWNĘTRZNY RP2	1
3411	13010044	ФИЛЬТР. ЭЛЕМЕНТ RP2 + УПЛОТНЕНИЕ RP2 FİLTRE ELEMANI + CONTA	ELEMENTO FILT. RP2+O-RING	ELEMENT FILT. RP2+USZCZELKA	1
4005	65301024	КОЛЛЕКТОР В СБОРЕ RP2 MANIFOLD KMPL. RP2	TUBO ABASTECIMENTO DE GÁS CPL. RP2	KOLEKTOR KOMPL. RP2	1
4006	13011367	СТАБИЛИЗАТОР + СТОПОРНОЕ КОЛЬЦО D.60 STABİLİZATÖR + CIRCLIPS D.60	ESTABILIZADOR+ANÉIS RETENÇÃO D.60	STABILIZATOR+ CIRCLIPS D.60	1
4007	13009722	ДАТЧИК ДАВЛЕНИЯ R1/8 R1/8 BASINÇ PRİZİ	TOMADA DE PRESSÃO R1/8	GNIAZDO CIŚNIENIOWE R1/8	1
4022	13020682	ШТУЦЕР ¨БАНДЖО¨ LCK-G1/8-PK4 ¨BANJO¨ RAKOR LCK-G1/8-PK4	CONEXÃO ¨BANJO¨ LCK-G1/8-PK4	ZŁĄCZE ¨BANJO¨ LCK-G1/8-PK4	1
4030	13020958	СОЕДИНИТЕЛЬНЫЙ КАБЕЛЬ SKP SKP BAĞLANTI KABLOSU	CABO DE CONEXÃO SKP	KABEL ŁĄCZĄCY SKP	1
4040	65300871	ВПУСКНОЙ ФЛАНЕЦ AGA51 AGA51 GİRİŞ FLANŞI	FLANGE DE ENTRADA AGA51	KOŁNIERZ WEJŚCIA AGA51	1
4100	65311581	ГАЗОВЫЙ КЛАПАН VGD20 5011 RP2'' GAZ VANASI VGD20 5011 RP2''	VÁLVULA GÁS VGD20 5011 RP2''	ZAWÓR GAZOWY VGD20 5011 RP2''	1
4102	13020950	ИСП. МЕХАНИЗМ ГАЗ SKP75.003E2 S.КОНЦЕВОЙ KURS SONSUZ SKP75.003E2 GAZ SERVOMOTORU	ATUADOR GÁS SKP75.003E2 S.FIM CURSO	SIŁOWNIK GAZ. SKP75.003E2 S.WYŁ.KRAŃCOWY	1
4105	13020951	ИСП. МЕХАНИЗМ ГАЗ SKP15.000E2 S.КОНЦЕВОЙ KURS SONSUZ SKP15.000E2 GAZ SERVOMOTORU	ATUADOR GÁS SKP15.000E2 S.FIM CURSO	SIŁOWNIK GAZ. SKP15.000E2 S.WYŁ.KRAŃCOWY	1
4110	13010078	РЕГУЛ ДАВЛ. ГАЗА. GW 150 A5 30—150MB DIN GW 150 A5 30-150MB DIN GAZ MANOSTATI	PRESSOSTATO GÁS GW 150 A5 30-150MB DIN	CZUJNIK CIŚ. GAZU GW 150 A5 30-150MB DIN	1
4130	65323019	РЕЛЕ ДАВ. ВОЗДУХА GW 50 A5 2,5-50MB GAZ BASINÇ ŞALT. GW 50 A5 2,5-50MB	PRESSOSTATO GAS GW 50 A5 2,5-50MB	CZUJNIK CIŚ. GAZU GW 50 A5 2,5-50MB	1
4150	65301075	ТРУБ. ОТБОРА VGD20 RP2 NC95/210-VG5/6 TUPLU GAZ BASI. VGD20 RP2 NC95/210-VG5/6	TB. PRESSÃO GÁS VGD20 RP2 NC95/210-VG5/6	RURA CIŚNIENI VGD20 RP2 NC95/210-VG5/6	1
4160	13023188	УГЛОВОЙ ШТУЦЕР DIRSEKLI RAKOR	CONEXÃO COTOVELO	ZŁĄCZKA TYPU KOLANKO	1
4170	13009721	ШТУЦЕР, ПРАВЫЙ SAĞ RAKOR	CONEXÃO DIREITA	ZŁĄCZE PRAWE	1
4200	13011733	КОМП-КТ УПЛОТНЕНИЙ VGG,VGF10/VGD20 RP2 VGG,VGF10/VGD20 RP2 CONTA KİTİ	KIT VEDAÇÕES VGG,VGF10/VGD20 RP2	ZESTAW USZCZELEK VGG,VGF10/VGD20 RP2	1

07/2015-R8220064-420010666000A

	6XXXXXXX	RU TR	PT	PL	X
4410	13009700	ГАЗ ФИЛЬТР ВНЕШНИЙ RP2 RP2 HARİCİ GAZ FİLTRESİ	FILTRO GÁS EXTERNO RP2	FILTR GAZ. ZEWNĘTRZNY RP2	1
4411	13010044	ФИЛЬТР. ЭЛЕМЕНТ RP2 + УПЛОТНЕНИЕ RP2 FİLTRE ELEMANI + CONTA	ELEMENTO FILT. RP2+O-RING	ELEMENT FILT. RP2+USZCZELKA	1
4505	65301022	КОЛЛЕКТОР В СБОРЕ DN65 MANIFOLD KMPL. DN65	TUBO ABASTECIMENTO GÁS COMPLETO DN65	KOLEKTOR KOMPL. DN65	1
	65301023	КОЛЛЕКТОР В СБОРЕ DN80 MANIFOLD KMPL. DN80	TUBO ABASTECIMENTO GÁS COMPLETO DN80	KOLEKTOR KOMPL. DN80	1
4506	13011367	СТАБИЛИЗАТОР + СТОПОРНОЕ КОЛЬЦО D.60 STABİLİZATÖR + CIRCLIPS D.60	ESTABILIZADOR+ANÉIS RETENÇÃO D.60	STABILIZATOR+ CIRCLIPS D.60	1
4507	13009722	ДАТЧИК ДАВЛЕНИЯ R1/8 R1/8 BASINÇ PRİZİ	TOMADA DE PRESSÃO R1/8	GNIAZDO CIŚNIENIOWE R1/8	1
4522	13020682	ШТУЦЕР ¨БАНДЖО¨ LCK-G1/8-PK4 ¨BANJO¨ RAKOR LCK-G1/8-PK4	CONEXÃO ¨BANJO¨ LCK-G1/8-PK4	ZŁĄCZE ¨BANJO¨ LCK-G1/8-PK4	1
4530	13020958	СОЕДИНИТЕЛЬНЫЙ КАБЕЛЬ SKP SKP BAĞLANTI KABLOSU	CABO DE CONEXÃO SKP	KABEL ŁĄCZĄCY SKP	1
4600	65311583	ГАЗОВЫЙ КЛАПАН VGD40 080 DN80 GAZ VANASI VGD40 080 DN80	VÁLVULA GÁS VGD40 080 DN80	ZAWÓR GAZOWY VGD40 080 DN80	1
	65323661	ГАЗОВЫЙ КЛАПАН VGD40 065 DN65 GAZ VANASI VGD40 065 DN65	VÁLVULA GÁS VGD40 065 DN65	ZAWÓR GAZ. VGD40 065 DN65	1
4602	13020950	ИСП. МЕХАНИЗМ ГАЗ SKP75.003E2 S.КОНЦЕВОЙ KURS SONSUZ SKP75.003E2 GAZ SERVOMOTORU	ATUADOR GÁS SKP75.003E2 S.FIM CURSO	SIŁOWNIK GAZ. SKP75.003E2 S.WYŁ.KRAŃCOWY	1
4605	13020951	ИСП. МЕХАНИЗМ ГАЗ SKP15.000E2 S.КОНЦЕВОЙ KURS SONSUZ SKP15.000E2 GAZ SERVOMOTORU	ATUADOR GÁS SKP15.000E2 S.FIM CURSO	SIŁOWNIK GAZ. SKP15.000E2 S.WYŁ.KRAŃCOWY	1
4610	13010078	РЕГУЛ ДАВЛ. ГАЗА. GW 150 A5 30—150MB DIN GW 150 A5 30-150MB DIN GAZ MANOSTATI	PRESSOSTATO GÁS GW 150 A5 30-150MB DIN	CZUJNIK CIŚ. GAZU GW 150 A5 30-150MB DIN	1
4630	65323019	РЕЛЕ ДАВ. ВОЗДУХА GW 50 A5 2,5-50MB GAZ BASINÇ ŞALT. GW 50 A5 2,5-50MB	PRESSOSTATO GAS GW 50 A5 2,5-50MB	CZUJNIK CIŚ. GAZU GW 50 A5 2,5-50MB	1
4650	65301025	ТРУБ. ОТБОРА VGD40 DN65 NC95/210-VG5/6 RAKOR.GAZ BASINÇ BO. DN65 NC95/210-VG5/6	TB. PR.GÁS CPL.VGD40 DN65 NC95/210-VG5/6	RURA CIŚNIENI VGD40 DN65 NC95/210-VG5/6	1
	65301026	ТРУБ. ОТБОРА VGD40 DN80 NC210-VG6 RAKOR.GAZ BASINÇ BO.VGD40 DN80 NC210-VG6	TUBO PRESS.GAS VGD40 DN80 NC210-VG6	RURA CIŚNIENI VGD40 DN80 NC210-VG6	1
4660	13023188	УГЛОВОЙ ШТУЦЕР DIRSEKLI RAKOR	CONEXÃO COTOVELO	ZŁĄCZKA TYPU KOLANKO	1
4670	13009721	ШТУЦЕР, ПРАВЫЙ SAĞ RAKOR	CONEXÃO DIREITA	ZŁĄCZE PRAWE	1
4700	13013781	КОМПЛЕКТ УПЛОТНЕНИЙ VGD40 DN65 VGD40 DN65 CONTA KİTİ	KIT VEDAÇÕES VGD40 DN65	ZESTAW USZCZELEK VGD40 DN65	1
	13013782	КОМПЛЕКТ УПЛОТНЕНИЙ VGD40 DN80 VGD40 DN80 CONTA KİTİ	KIT JUNTAS VGD40 DN80	ZESTAW USZCZELEK VGD40 DN80	1
4910	13009703	ГАЗ ФИЛЬТР ВНЕШНИЙ DN65 DN65 HARİCİ GAZ FİLTRESİ	FILTRO GÁS EXTERNO DN65	FILTR GAZ. ZEWNĘTRZNY DN65	1
	13013787	ГАЗ. ФИЛЬТР DN80 DN80 GAZ FİLTRESİ	FILTRO GÁS DN80	FILTR GAZ. DN80	1
4911	13009704	ГАЗ. ФИЛЬТРУЮЩИЙ ЭЛЕМЕНТ DN65 С УПЛОТН. CONTALI DN65 GAZ FİLTRE ELEMANI	ELEMENTO FILTRANTE GÁS DN65 COM O-RING	ELEMENT FILTRUJĄCY GAZ. DN65 Z USZCZELKĄ	1
	13013788	ГАЗ. ФИЛЬТРУЮЩИЙ ЭЛЕМЕНТ DN80 С УПЛОТН. CONTA İLE DN80 GAZ FİLTRE EDİCİ ELEMAN	ELEMENTO FILTRANTE GÁS DN80 COM JUNTA	ELEMENT FILTRUJĄCY GAZ. DN80 Z USZCZELKĄ	1

07/2015-R8220064-420010666000A

	6XXXXXXX				X

	6XXXXXXX				

ADDRESSES

www.elco.net

LIST OF THE ABBREVIATIONS

: Maintenance parts / Pièces d'entretien / Materiali di consumo /
: Piezas de mantenimiento / Hilfsmaterial / Onderhoudsonderdelen

: Wearing parts / Pièces d'usure / Parti di usura
: Piezas de desgaste / Verschleissteile / Slijtageonderdelen

: Item not stocked, manufactured to order / Article non stocké, fabrication à la demande /
: Articolo non a magazzino, produzione all'ordine / Artículo no almacenado, fabricación previa solicitud /
: Keine Lagerware, wird bei Bedarf bestellt, Artikel niet op voorraad, fabricage op bestelling

IDENTIFICATION PLATE

SERIAL NUMBER

7 Characters : 00001 / K A

Sequencial number

Trimester of manufacture : from A to D

Year of manufacture : K ➟ 2003
L ➟ 2004
M ➟ 2005
etc ...

8 Characters : 00001 / L 09

Sequencial number

Month of manufacture

Year of manufacture : K ➟ 2003
L ➟ 2004
M ➟ 2005
etc ...

11 Characters : 2007 1370 P 07

Year of manufacture

Month of manufacture

Year of manufacture : P ➟ 2007
R ➟ 2008
S ➟ 2009
T ➟ 2010
U ➟ 2011
W➟ 2012
X ➟ 2013
Y ➟ 2014
Z ➟ 2015

The indications mentionned on the prices, commercial or technical literature and the scheme are written for your guidance and are available at a given time. The CONSTRUCTOR retains the power to modify the presentation, the form, the size, the conception or the material of the products.