elco

SPARE PARTS EXPLODED VIEW
DUAL-FUEL BURNERS
Model
CB-VGL6M(V) /TC

R8220337-01 - 05/06/2019

Col	Reference	Model type	Begin	End
1	3836822	BB-VGL6.1600 M /TC	03-2019	-
2	3836826	BB-VGL6.1600 M V /TC	03-2019	-
3	3836823	BB-VGL6.2100 M /TC	03-2019	-
4	3836827	BB-VGL6.2100 M V /TC	03-2019	-
5	13005917	CH-D731-T1/KN	10-2000	-
6	13005918	CH-D731 - T2/KL	10-2000	-
7	13005919	CH-D731-T3/KM	10-2000	-
8	13005929	CH-D732-T1/KN	07-2000	-
9	13005930	CH-D732-T2/KL	07-2000	-
10	13005931	CH-D732-T3/KM	11-2003	-
11	3834659	GT-D420-1"1/2-RP2"/TC	02-2015	-
12	3834660	GT-D421-2"-RP2"/TC	02-2015	-
13	3834661	GT-D422-65-DN65 /TC	02-2015	-
14	3834662	GT-S42-65-DN65/TC	02-2015	-

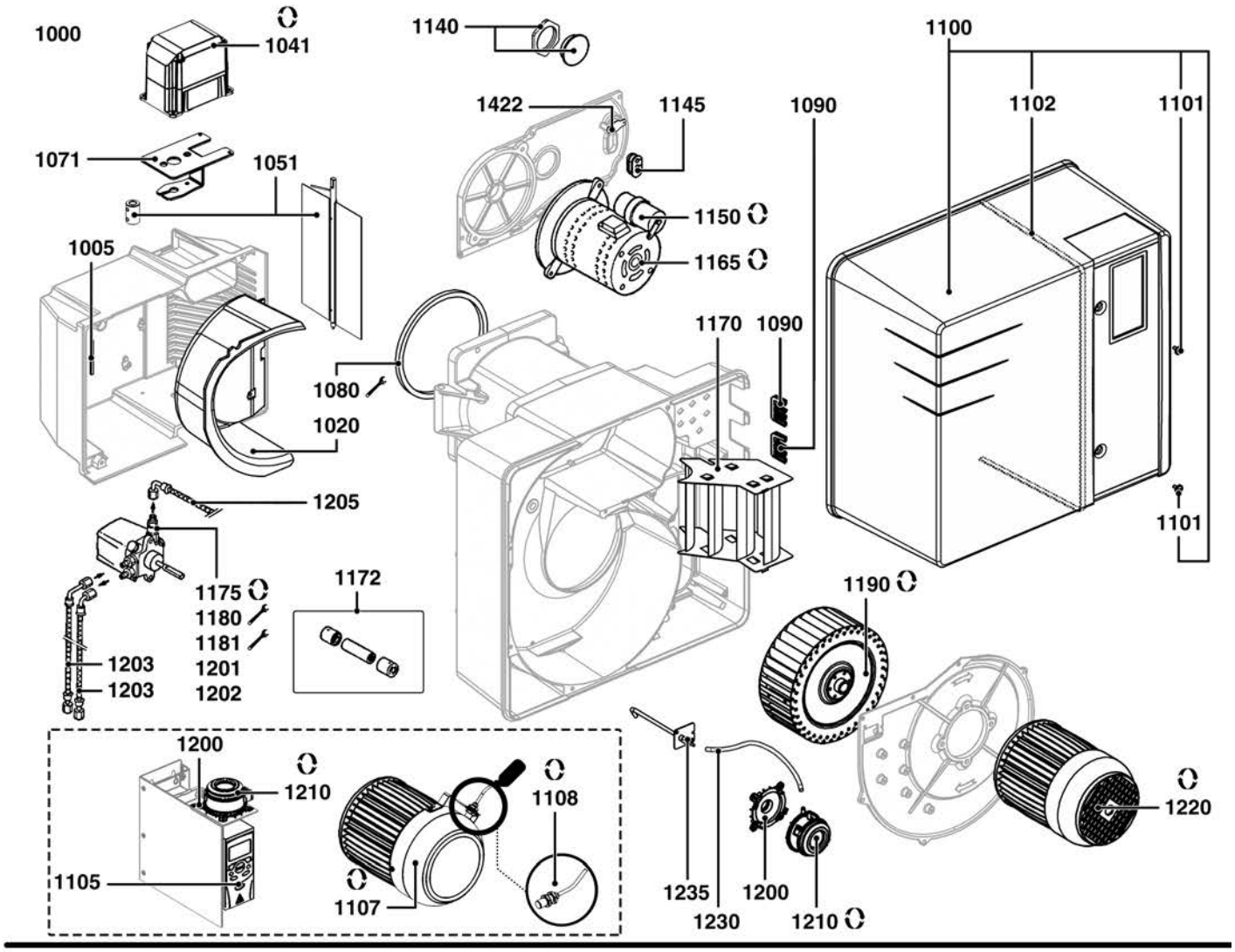

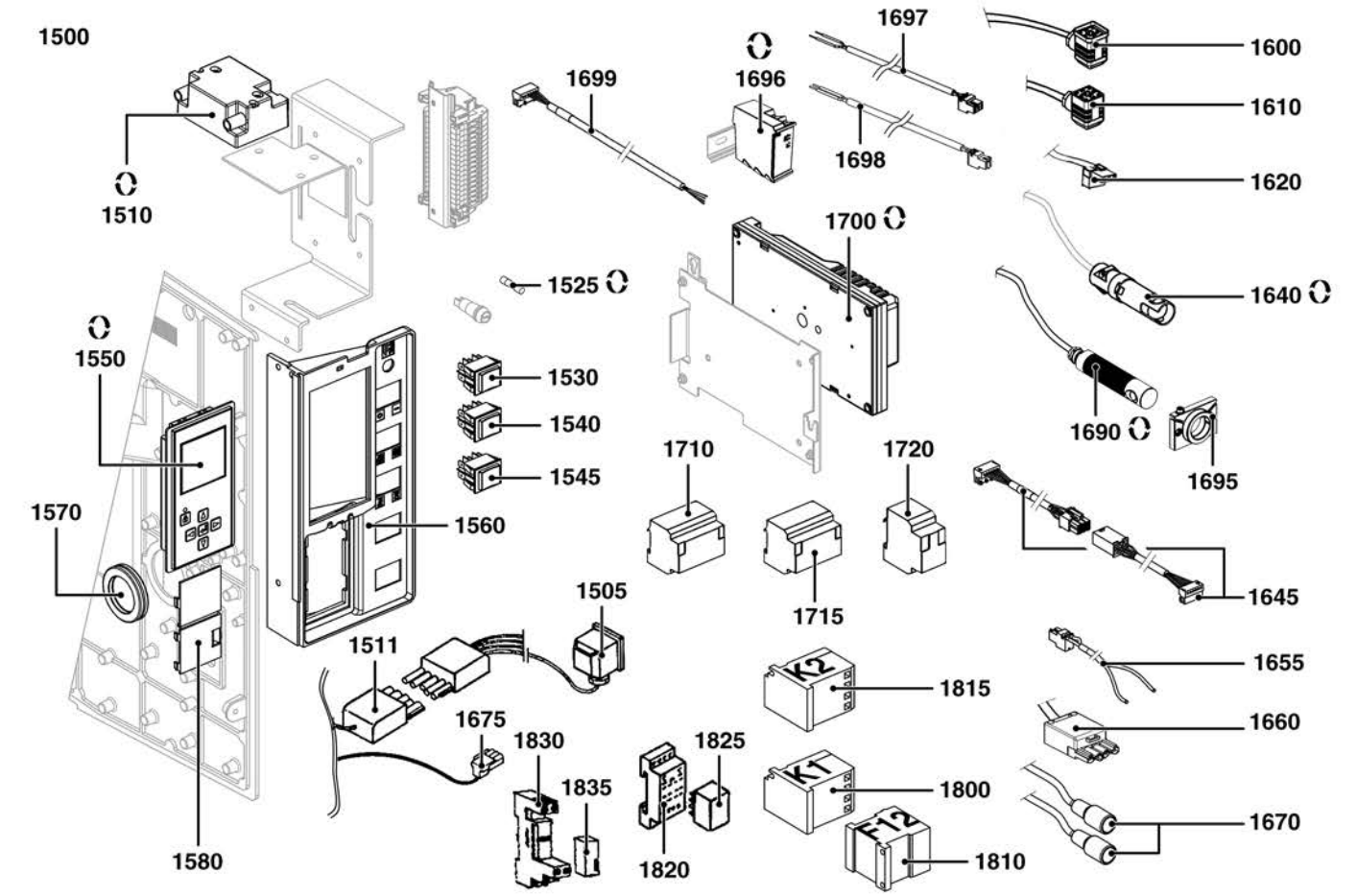

R8210112

06/2019-R8220337-420011043000A

| | Description | Manf. Pt. N | Type | BB-VGL6.1600 M /TC | BB-VGL6.1600 M V /TC | BB-VGL6.2100 M /TC | BB-VGL6.2100 M V /TC | CH-D731-T1/KN | CH-D731 - T2/KL | CH-D731-T3/KM | CH-D732-T1/KN | CH-D732-T2/KL | CH-D732-T3/KM | GT-D420-1"1/2-RP2"/TC | GT-D421-2"-RP2"/TC | GT-D422-65-DN65 /TC | GT-S42-65-DN65/TC | | |

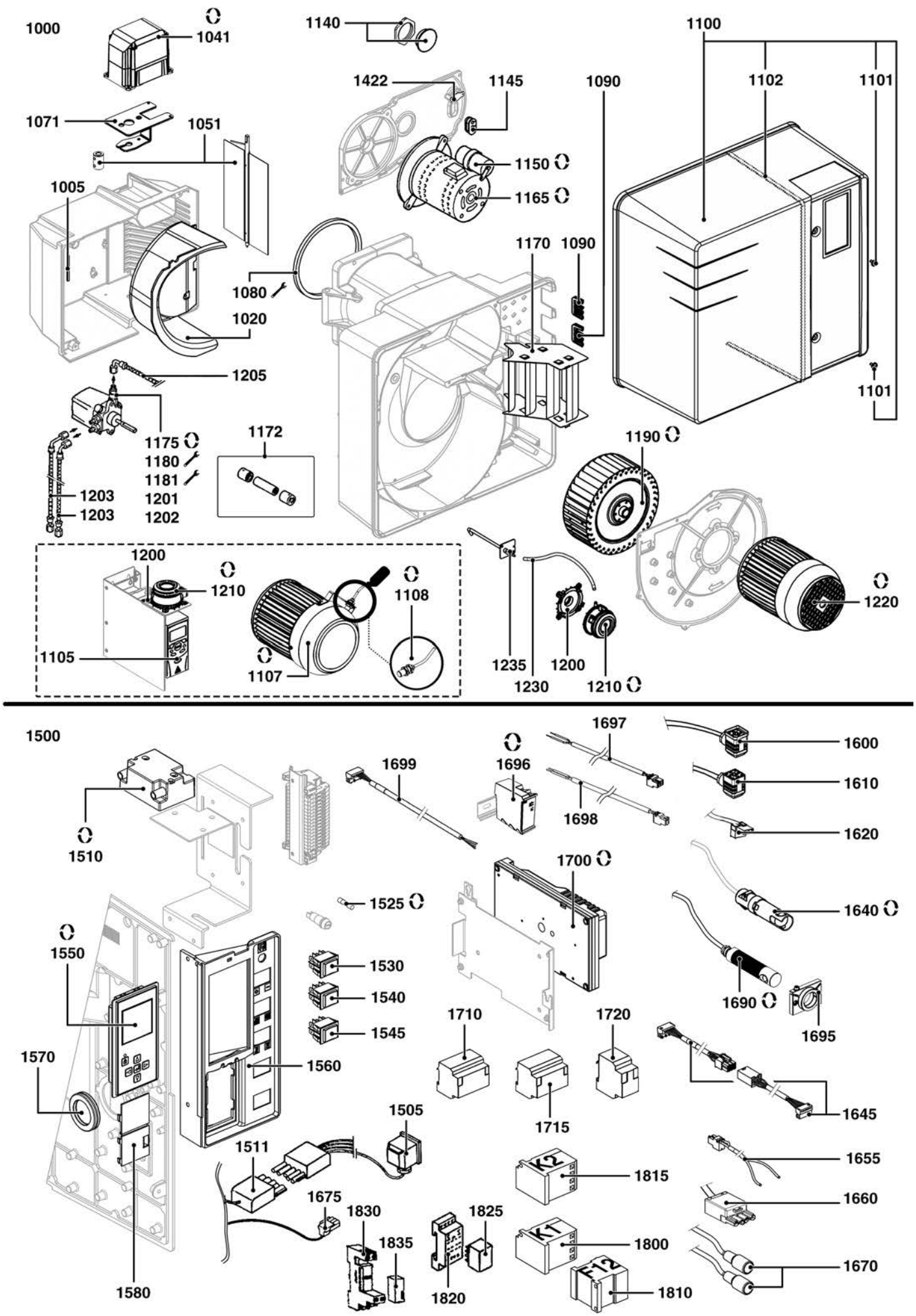

R8210112

06/2019-R8220337-420011043000A

	Description	Manf. Pt. N	Type	1 BB-VGL6.1600 M /TC	2 BB-VGL6.1600 M V /TC	3 BB-VGL6.2100 M /TC	4 BB-VGL6.2100 M V /TC	5 CH-D731-T1/KN	6 CH-D731 - T2/KL	7 CH-D731-T3/KM	8 CH-D732-T1/KN	9 CH-D732-T2/KL	10 CH-D732-T3/KM	11 GT-D420-1"1/2-RP2"/TC	12 GT-D421-2"-RP2"/TC	13 GT-D422-65-DN65 /TC	14 GT-S42-65-DN65/TC	15	16	17	18	From	to
1810	THERM. RELAY LOV RF9 4.5-7.5A	65075804		●		●																	
1815	CONTACTOR LOV BG0910A 230/50-60HZ	65074309	GMP	●	●	●	●																
1820	RELAY SOCKET FIN 94.74SMA	65323150			●		●																
1825	RELAY FIN 55.34.8.230.0054	65323140			●		●																
1830	FIN RELAY SUPPORT 95.05	13017720		●	●	●	●																
1835	RELAY FIN 40.52 + CLIP	13017721		●	●	●	●																

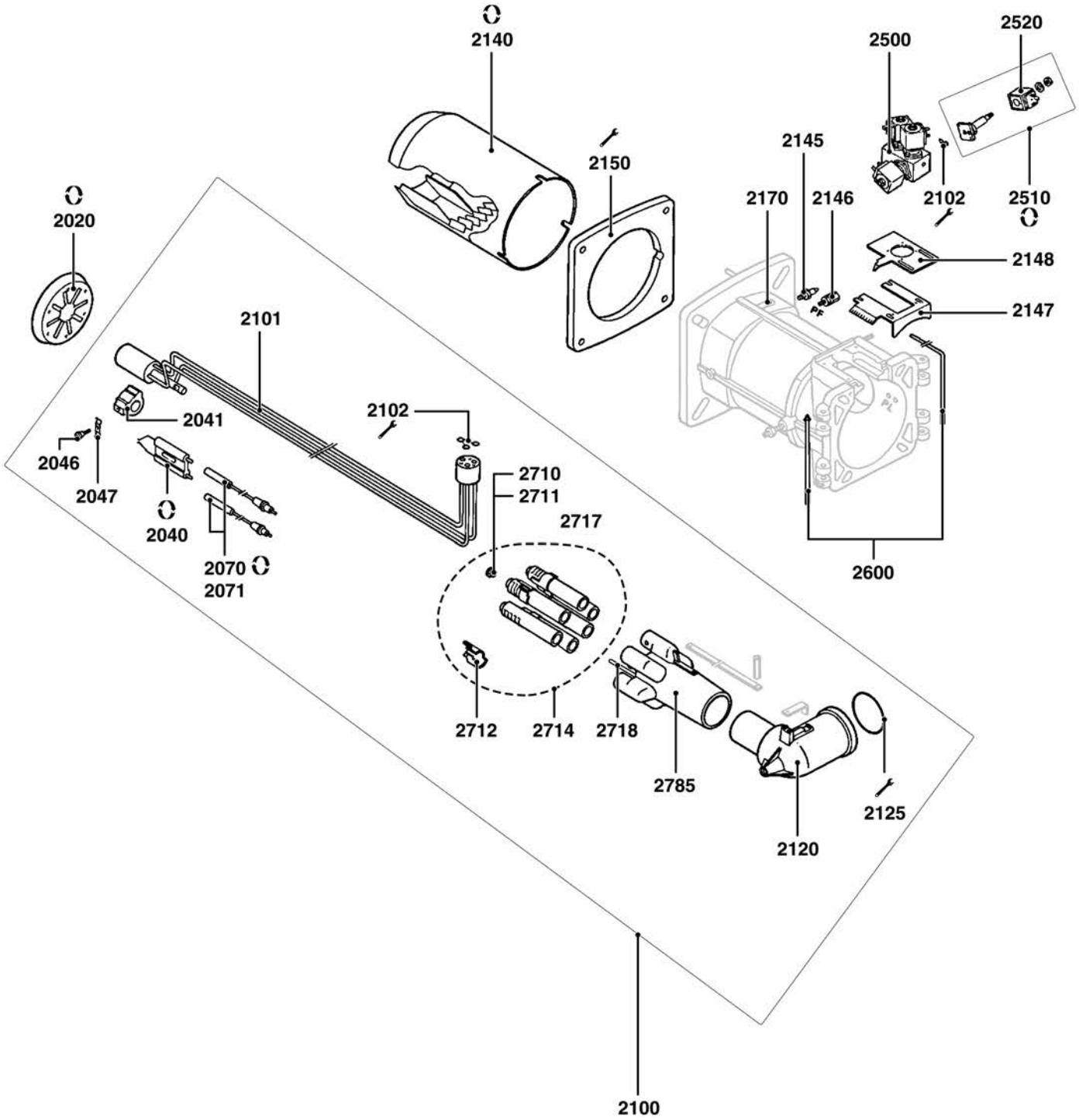
2140
2150
2500
2520
2145
2170
2146
2102
2510
2148
2147
2020
2101
2041
2102
2046
2047
2040
2070
2071
2710
2711
2717
2600
2712
2714
2718
2785
2125
2120
2100

	Description	Manf. Pt. N	Type	BB-VGL6.1600 M /TC	BB-VGL6.1600 M V /TC	BB-VGL6.2100 M /TC	BB-VGL6.2100 M V /TC	CH-D731-T1/KN	CH-D731 - T2/KL	CH-D731-T3/KM	CH-D732-T1/KN	CH-D732-T2/KL	CH-D732-T3/KM	GT-D420-1"1/2-RP2"/TC	GT-D421-2"-RP2"/TC	GT-D422-65-DN65 /TC	GT-S42-65-DN65/TC							From	to
				1	2	3	4	5	6	7	8	9	10	11	12	13	14	15	16	17	18				
2000	COMBUSTION HEAD																								
2020	BAFFLE PLATE D155/50 8SL R 7DRIL.	13009712									●	●	●												
	BAFFLE PLATE D168/50 8SL 6DRIL.	13018284						●	●	●															
2040	ELECTROD.BLOC.27X55 d6,4 D2X23 45°+SCREW	13009726						●	●	●	●	●	●												
2041	ELECTRODE SUPPORT	13010050						●	●	●	●	●	●												
2046	WASHER HEAD SCREW M4/ELECTRODES BLOCK	13010049						●	●	●	●	●	●												
2047	FLANGE 20X11X2,6 FIX. ELECTRODE	13009725						●	●	●	●	●	●												
2070	IGNITION CABLE D6,35/D6,35 L950 X2 HEAD	13009727						●	●	●	●	●	●												
2071	ROUND CONNECTOR CABLE ALU.ION X2	13010056						●	●	●	●	●	●												
2100	COMB.HEAD DUAL FUEL L526 D156 CPL.	13018945						●			●														
	COMB.HEAD DUAL FUEL L626 D156 CPL.	13018947								●			●												
	COMB.HEAD DUAL FUEL L726 D156 CPL.	13018946							●			●													
2101	NOZZLE ROD D42/10 L526 3 NOZZ.DUAL FUEL	13014682						●			●														
	NOZZLE ROD D42/10 L626 3 NOZZ.DUAL FUEL	13014684								●			●												
	NOZZLE ROD D42/10 L726 3 NOZZ.DUAL FUEL	13014683							●			●													
2102	O-RING D6X2	13009812						●	●	●	●	●	●												
2120	GAS ELBOW + TUBE T1/KN	13009732						●			●														
	GAS ELBOW + TUBE T2/KL	13009733							●			●													
	GAS ELBOW + TUBE T3/KM	13009734								●			●												
2125	O-RING D75X4	13009731						●	●	●	●	●	●												
2140	FLAME TUBE D227/160/205 L343 TURBU.D171	13009716									●														
	FLAME TUBE D227/160/205 L443 TURBU.D171	13009718											●												
	FLAME TUBE D227/160/205 L543 TURBU.D171	13009717										●													
	FLAME TUBE D227/172/190 L343 TURBU.D171	13009713						●																	
	FLAME TUBE D227/172/190 L443 TURBU.D171	13009715								●															
	FLAME TUBE D227/172/190 L543 TURBU.D171	13009714							●																
2145	PRESSURE TAP R1/8	13009722						●	●	●	●	●	●												
2146	STRAIGHT UNION	13009721						●	●	●	●	●	●												
2147	CLOSURE PLATE.RTC EQ. H-G	13009816						●	●	●	●	●	●												
2148	COVER NOZZLE ROD 174X90 D63/NC160-210/V6	13009817						●	●	●	●	●	●												
2150	GASKET/BURNER FLANGE 335X326X3 D250	13009719						●	●	●	●	●	●												
2170	BURNER TUBE SCREW FIX. KIT (X3)	13009723						●	●	●	●	●	●												
2500	OIL DISTRIBUTOR 3 STAGES	13009811						●	●	●	●	●	●												
2510	LUC ELECTRO VALVE 121F63 2/2NF9W	13009813						●	●	●	●	●	●												
2520	COIL PAR 32MM 115V 14W	65300750	110V								●														
	LUCIFER COIL 9W	13009814						●	●	●	●	●	●												
2600	SPINDLE/HINGE BODY-HEAD D12X210+D12X83	13009724						●	●	●	●	●	●												
2710	NATURAL GAS ACCESS. KIT	13010048						●	●	●	●	●	●												
2711	PROPANE ACCESS. KIT	13007041						●	●	●	●	●	●												
2712	SHUTTER/NOZZLE	13010046						●	●	●	●	●	●												
2714	GASNOZZLE D28 L170 6 SL.+RING (6 PCS)	13010047						●	●	●	●	●	●												
2718	GASNOZZLE D6/4 L151 IGNITION	13014075						●	●	●	●	●	●												
2785	GAS HEAD L246 D156/75/14 6 DRIL.D25	13018948						●	●	●	●	●	●												

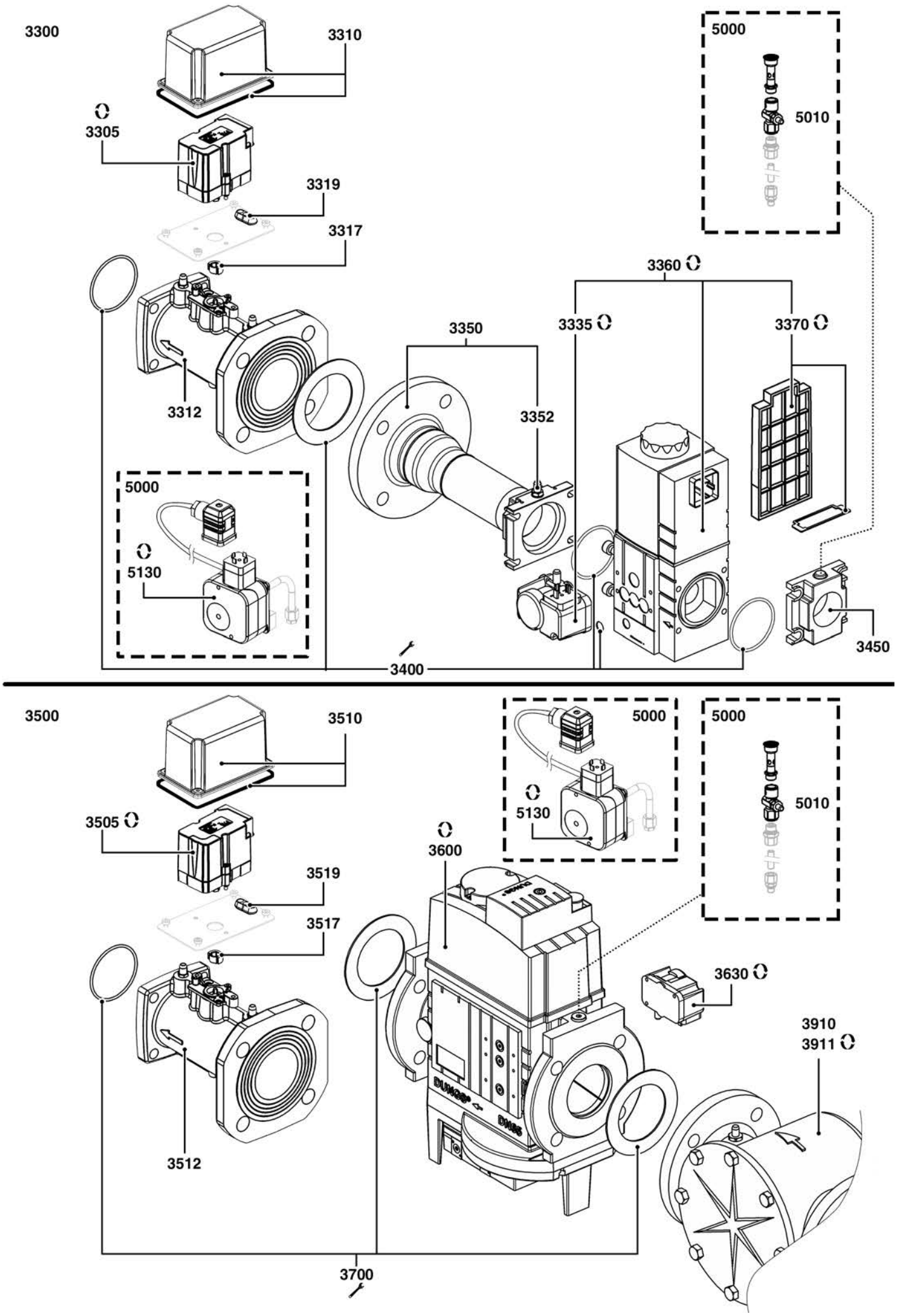
3300
3310
3305
3319
3317
3312
5000
5010
3360
3335
3370
3350
3352
5000
5130
3450
3400
3500
3510
3505
3519
3517
3512
5000
5130
5000
5010
3600
3630
3910
3911
3700
R8220098

	Description	Manf. Pt. N	Type	1 BB-VGL6.1600 M /TC	2 BB-VGL6.1600 M V /TC	3 BB-VGL6.2100 M /TC	4 BB-VGL6.2100 M V /TC	5 CH-D731-T1/KN	6 CH-D731 - T2/KL	7 CH-D731-T3/KM	8 CH-D732-T1/KN	9 CH-D732-T2/KL	10 CH-D732-T3/KM	11 GT-D420-1"1/2-RP2"/TC	12 GT-D421-2"-RP2"/TC	13 GT-D422-65-DN65 /TC	14 GT-D422-65-DN65/TC	15 GT-S42-65-DN65/TC	16	17	18	From	to
3300	GAS TRAIN																						
3305	ACTUATOR STE 4,5 B0.37/6-R + CABLE L600	65300527												●	●								
3310	COVER 125X79X73/ACTUATOR STE 4,5	65312327												●	●								
3312	GASFLAP 164X164 DN65 L200+ACTUATOR STE	65301268												●	●								
3317	ROTATION STOP F. SHAFT STE4.5 0.8NM	65301267												●	●								
3319	GROMMET DIM.34X15/12 D.6,2	65312458												●	●								
3335	GAS PRESS.SWITCH GW 150 A5 5-150MB	13010078												●	●								
3350	COMPLETE COLLECTOR RP2	13009693												●	●								
3352	PRESSURE TAP R1/8	13009722												●	●								
3360	GAS VALVE MBC1200 SE S82 RP2+GPS GW150	65300008													●								
	GAS VALVE MBC700 SE S82 RP1 1/4+GW150	13022996												●									
3370	STRAINER MBC 1200	13022417													●								
	STRAINER MBC 700	13022416												●									
3400	O-RING KIT D70+D74X3+D115/77/MBC700-1200	65301065												●	●								
3450	FLANGE MB415/420 RP1 1/2 + PRES.PLUG	65322637												●	●								
3500	GAS TRAIN																						
3505	ACTUATOR STE 4,5 B0.37/6-R + CABLE L600	65300527														●							
3510	COVER 125X79X73/ACTUATOR STE 4,5	65312327														●							
3512	GASFLAP 164X164 DN65 L200+ACTUATOR STE	65301268														●							
3517	ROTATION STOP F. SHAFT STE4.5 0.8NM	65301267														●							
3519	GROMMET DIM.34X15/12 D.6,2	65312458														●							
3600	GAS VALVE MBC1900 SE DN65+GPS GW150	65301067														●							
3630	GAS PRESS.SWITCH GW 150 A5 5-150MB	13010078														●							
3700	O-RING KIT D70X3+ D115/77(2)/MBC1900/VGD	65301066														●							
3910	EXTERNAL GAS FILTER DN65	13009703														●							
3911	STRAINER DN65 /ANELLO	13009704														●							
5000	ACCESSORIES																						
5010	TRIAL BURNER WITH PUSH-BUTTON PB2	65311362												●	●	●							
5130	MAX. GAS PRES. SWITCH UB50 A2+CABLE L600	65326220	PED											●	●	●							

4000

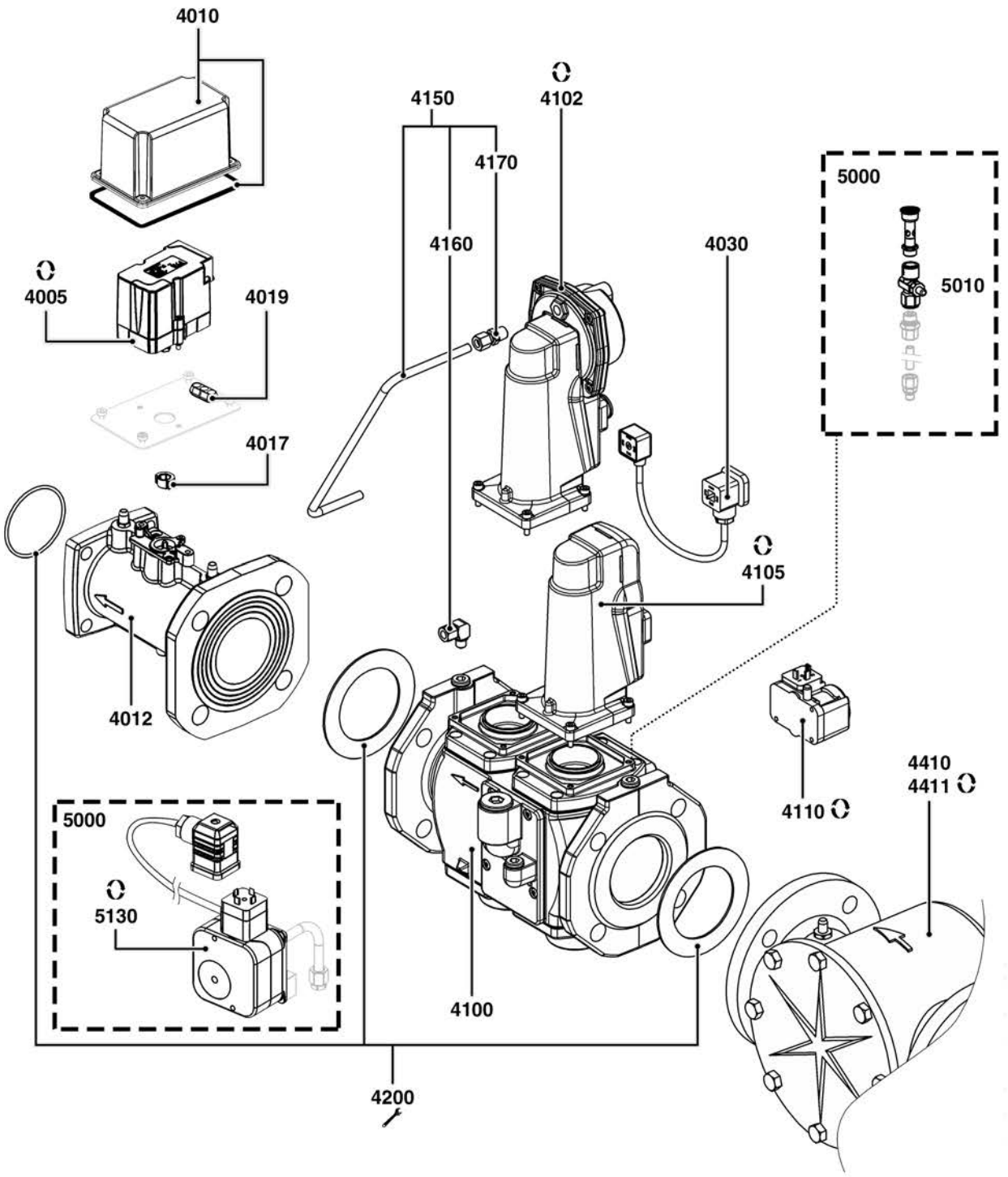
4010
4150
4102
4170
5000
4160
4030
5010
4005
4019
4017
4105
4012
4410
4411
4110
5000
5130
4100
4200

| | Description | Manf. Pt. N | Type | BB-VGL6.1600 M /TC | BB-VGL6.1600 M V /TC | BB-VGL6.2100 M /TC | BB-VGL6.2100 M V /TC | CH-D731-T1/KN | CH-D731 - T2/KL | CH-D731-T3/KM | CH-D732-T1/KN | CH-D732-T2/KL | CH-D732-T3/KM | GT-D420-1"1/2-RP2"/TC | GT-D421-2"-RP2"/TC | GT-D422-65-DN65 /TC | GT-S42-65-DN65/TC | | |

	6XXXXXXX	DE NL	FR ES	IT	X
1005	13009640	DICHTUNG/LUFTKASTE 109X6X7 PROFIL PAKKING/LUCHTKAST 109X6X7 GEPROFILEERD	JOINT/BOITE A AIR 109X6X7 PROFILE JUNTA/CAJA DE AIRE 109X6X7 PERFILADA	GUARNIZIONE/CASSA ARIA 109X6X7 PROFILATO	1
1020	13009641	ISOLIERUNG-LUFTKASTEN ISOLATIE LUCHTKAST	ISOLATION BOITE A AIR AISLAMIENTO CAJA DE AIRE	ISOLAMENTO SCATOLA DELL'ARIA	1
1041	65326804	STELLANTR.STE 4,5 Q3.51/6L 3NM+KAB.L1000 REGELMOTOR STE4,5 Q3.51/6L 3NM+KAB.L1000	SERVOMOT.STE 4,5 Q3.51/6 L 3NM+CAB.L1000 SERVOMOTOR STE 4,5 Q3.51/6 L 3NM	SERVOMOT.STE 4,5 Q3.51/6 L 3NM+CAV.L1000	1
1051	65326227	KOMPL. LUFTKLAPPE V6/NC160-210 COMPLETE LUCHTKLEP V6/NC160-210	VOLET D'AIR EQUIPE V6/NC160-210 VÁLVULA DE AIRE EQUIPADA V6/NC160-210	SERRANDA DELL'ARIA EQUIP. V6/NC160-210	1
1071	65326226	STELLANTRIEBHALTER STEUN REGELMOTOR	SUPPORT SERVOMOTEUR SOPORTE SERVOMOTOR	SUPPORTO SERVOMOTORE	1
1080	13010055	DICHTUNG/GEHAUSE-KOPF D218X8/5X10 PAKKING BRANDERH./BRANDERK. Ø218X8/5X10	JOINT/CARTER-TETE D218X8/5X10 JUNTA/CÁRTER-CABEZA D218X8/5X10	GUARNIZIONE/FUSIONE-TESTA D218X8/5X10	1
1090	13016845	KABELDURCHFÜHRUNG / GEHÄUSE KABELDOORVOERING	PASSE FIL/CARTER PASACABLES/CÁRTER	PASSAFILO/ CARTER	1
1100	65301016	BRENNERHAUBE GRAU 590X547X476/V 5-6 BRANDERKAP GRAU 590X547X476+SCHROEF/V5-6	CAPOT GRIS 590X547X476+VIS/V 5-6 CUBIERTA GRIS 590X547X476+TORNILLO/V 5-6	COFANO GRIGIO 590X547X476+VITE/V 5-6	1
1101	65300519	FLACHKOPF-SCHRAUBE M5X15+SPITZE PLATKOPSCHROEF M5X15	VIS A TETE PLATE M5X15 TORNILLO DE CABEZA PLANA M5X15	VITE A TESTA PIANA M5X15	1
1102	13009772	DICHTUNG/HAUBE 10X3 L1000 PAKKING/BRANDERKAP 10X3 L1000	JOINT/CAPOT 10X3 L1000 JUNTA/CUBIERTA 10X3 L1000	GUARNIZIONE/COFANO 10X3 L1000	1
1105	65326446	FREQ.UMRICHTER ACS150 3KW FREQ.OMVORMER ACS150 3KW	VARIATEUR FREQ. ACS150 3KW CONVERTIDORES FREQ. ACS150 3KW	VARIATORE FREQ. ACS150 3KW	1
1107	65326448	MOTOR 2,2KW+DREHSENSOR/DREHZAHLREGLER MOTOR 2,2KW+ROTAT. /FREQU.REGELAAR	MOTEUR 2,2KW+CAPTEUR ROTAT./VARIATEUR MOTOR 2,2KW+SENSOR INDUCT./VARIADOR	MOTORE 2,2KW+SENSORE ROTA./VARIATORE	1
	65326449	MOTOR 2,5KW+DREHSENSOR/DREHZAHLREGLER MOTOR 2,5KW+ROTAT. /FREQU.REGELAAR	MOTEUR 2,5KW+CAPTEUR ROTAT./VARIATEUR MOTOR 2,5KW+SENSOR INDUCT./VARIADOR	MOTORE 2,5KW+SENSORE ROTA./VARIATORE	1
1108	65312550	INDUKT. NÄHERUNGSSCHALTER NAMUR D25 SENSOR NAMUR D25	CAPTEUR NAMUR D25 SENSOR NAMUR D25	SENSORE NAMUR D25	1
1140	13010008	SCHAUGLAS KPL. KIJKGLAS	VERRE DE REGARD VISOR	VISORE DI CALDAIA	1
1145	13014004	TUELLE DRAADGELEIDER	PASSE FILS PASACABLES	PASSAFILO	1
1150	65326967	KONDENSATOR 22µF 2P 3MM CONDENSATOR 22µF 2P 3MM	CONDENSATEUR 22µF 2P 3MM CONDENSADOR 22µF 2P 3MM	CONDENSATORE 22µF 2P 3MM	1
1165	13009807	MOTOR 0,45KW 230V D12,7 GMP MOTOR /POMP V-GL6.1600 /2100 DP 0,45KW	MOTEUR 0,45KW 230V D12,7 GMP MOTOR 0,45KW 230V D12,7 GMP	MOTORE 0,45KW 230V D12,7 GMP	1
1170	13009748	LUFTLEITSCHAUFEL 148/162 4SCH. LUCHTRECYCLAGE 148/162 4BL.	REDRESSEUR D'AIR 148/162 4AIL. RECTIFICADOR DE AIRE 148/162 4AL.	RADDRIZZATORE D'ARIA 148/162 4PAL.	1
1172	13009806	KUPPLUNG PUMPE/MOTOR H-B KOPPELING POMP/MOTOR H-B VG/L6	ACCOUPLEMENT POMPE/MOTEUR H-B ACOPLAMIENTO BOMBA/MOTOR H-B	ACCOPPIAMENTO POMPA/MOTORE H-B	1
1175	13009802	ÖLPUMPE AJ6 CC 1004 OLIEPOMP AJ 6 CC 1004	POMPE FIOUL AJ6 CC 1004 BOMBA FUEL AJ6 CC 1004	POMPA GASOLIO AJ6 CC 1004	1
1180	13014194	OELFILTER 150µ / PUMPE AJ6 OLIEFILTER 150µ / POMP AJ6	FILTRE FIOUL 150µ / POMPE AJ6 FILTRO OIL 150µ / BOMBA AJ6	FILTRO OLIO 150µ / POMPA AJ6	1
1181	13014193	DICHTUNG/DECKEL-PUMPE SUN AJ PAKKING/DEKSEL-POMP SUN AJ	JOINT/COUVERCLE POMPE SUN AJ JUNTA/TAPA-BOMBA SUN AJ	GUARNIZIONE/COPERCHIO-POMPA SUN AJ	1
1190	13009736	VENTILATORRAD D240X114 D24 VENTILATORRAD D240X114 d24	TURBINE D240X114 d24 TURBINA D240X114 d24	VENTOLA D240X114 d24	1
	13009737	VENTILATORRAD D250X114 D24 VENTILATORRAD D250X114 d24	TURBINE D250X114 d24 TURBINA D250X114 d24	VENTOLA D250X114 d24	1
1200	13020723	HALTER D32 LUFTDRUCKWAECHTER HUB LUCHTDRUKSCHAKELAAR STEUN D32	SUPPORT MANOSTAT AIR D32 SOPORTE DEL MANOSTATO DE AIRE D32	SUPPORTO PRESSOSTATO DELL'ARIA D32	1
1201	13014419	DOPPELNIPPEL G1/4Z M16X1,5 NIPPEL OLIESLANG G1/4" M16 x 1,5	RACCORD/FLEXIBLE G1/4/M16X1,5 EMPALME/MANGUERA G1/4/M16X1,5	RACCORDO/TUBO FLESSIBILE G1/4/M16X1,5	1
1202	13014676	DOPPELNIPPEL G1/4Z M14X1,5 NIPPEL OLIESLANG G1/8" M14 x 1,5	RACCORD/FLEXIBLE G1/8/M14X1,5 EMPALME/MANGUERA G1/8/M14X1,5	RACCORDO/TUBO FLESSIBILE G1/8/M14X1,5	1
1203	13009815	OELSCHLAUCH M16x1,5-3/8 Z L1500 OLIESLANG VL06/M16 X 1,5-3/8"	FLEXIBLE FIOUL L 1.5M MANGUERA FUEL L 1.5M	TUBO FLESSIBILE GASOLIO L 1.5M	1
1205	13009809	OELSCHLAUCH M14X1,5X2 L1300 OLIESLANG M14 X 1,5 X 2, L 1300	FLEXIBLE M14X1,5X2 L1300 MANGUERA M14X1,5X2 L1300	TUBO FLESSIBILE M14X1,5X2 L1300	1
1210	65300021	LUFTDRUCKWACHTER 604.92 1-10MB LUCHTDRUKSCHAKELAAR 604.92 1-10MB	MANOSTAT AIR 604.92 1-10MB PRESOSTATO AIRE 604.92 1-10MB	PRESSOSTATO ARIA 604.92 1-10MB	1
1220	13009739	MOTOR 2,2KW230/400V D24+STECKER BRANDERMOTOR VG61600M/061600/EK06160G	MOTEUR 2,2KW230/400V D24+PRISE MOTOR 2,2KW230/400V D24+TOMA	MOTORE 2,2KW230/400V D24+PRESA	1
	13009740	MOTOR 2,5 KW2307400V D241SRTECKER MOTOR 2,5KW230/400V D24+STEKKER	MOTEUR 2,5KW230/400V D24+PRISE MOTOR 2,5KW230/400V D24+TOMA	MOTORE 2,5KW230/400V D24+PRESA	1
1230	13014337	TRANSPARENTER PVC ROHR D4/6 TRANSPARANTE PVC BUIS D4/6	TUYAU PVC TRANSPARENT D4/6 TUBO PVC TRANSPARENTE D4/6	TUBETTO PVC TRANSPARENTE D4/6	1
1235	13009738	LUFTDRUCKNIPPEL DURCHFLUSS-DUESE D0,7 L1 LUCHTDRUKAANSLUITING MONDSTUK D0,7 L145	PRISE PRESSION AIR AJUTAGE D0,7 L145 TOMA PRESION AIRE TOBERA D0,7 L145	PRESA PRESSIONE ARIA BOCCHELLO D0,7 L145	1
1422	65321365	ABDECKUNG FÜR ZELLENPOSITION DEKKING VOOR FOTOCEL LOCATIE	COUVERCLE POUR EMPLACEMENT CELLULE TAPA PARA UBICACIÓN FOTOCÉLULA	TAPPO PER FORO FOTOCELLULA	1

	6XXXXXXX	DE NL	FR ES	IT	X
1505	13014716	KABEL ÖLVENTIL+DIN/WIE.5P L1500VS+1+2+3 MAG.KLEPKABEL+P.DIN/WI.5P L1500VS+1+2+3	CABLE EL.VANNE+P.DIN/WI.5P L1500VS+1+2+3 CABLE EL.VALV.+T.DIN/WI.5P L1500VS+1+2+3	CAVO EL.VALVOLA+DIN/WIE.5P L1500VS+1+2+3	1
1510	13009663	ZUENDTRAFO EBI 2X7,5 230V ONTSTEKINGSTRAFO EBI 2X7,5 230V	ALLUMEUR EBI 2X7,5 230V ENCENDEDOR EBI 2X7,5 230V	TRASFO. ACC. EBI 2X7,5 230V+PRESA TERRA	1
1511	13014120	KABEL ÖLVENTIL+STCK WIE. 5P 5X0,75 L1250 MAGNEETKLEPKABEL+ST.WIE. 5P/5X0,75 L1250	CABLE EL.VANNE+PRISE WIE. 5P/5X0,75L1250 CABLE EL.VALV.+TOMA WIE. 5P 5X0,75 L1250	CAVO EL.VALVOLA+P. WIE. 5P 5X0,75 L1250	1
1525	65327806	SICHERUNG 5X20F STD 10A 250V ZEKERING 5X20F STD 10A 250V	FUSIBLE 5X20F STD 10A 250V FUSIBLE 5X20F STD 10A 250V	FUSIBILE 5X20F STD 10A 250V	1
1530	13010007	LEUCHTSCHALTER EIN/AUS SCHAKELAAR AAN-UIT	INTERRUPTEUR MARCHE/ARRET INTERRUPTOR ON/OFF	INTERUTTORE ON/OFF	1
1540	13014009	BETRIEBSSCHALTER SCHAKELAAR - BEDRIJF	INTERRUPTEUR - FONCTIONNEMENT INTERRUPTOR - FUNCIONAMIENTO	INTERRUTTORE - FUNZIONAMENTO	1
1545	13014009	BETRIEBSSCHALTER SCHAKELAAR - BEDRIJF	INTERRUPTEUR - FONCTIONNEMENT INTERRUPTOR - FUNCIONAMIENTO	INTERRUTTORE - FUNZIONAMENTO	1
1550	65326869	ANZEIGE FUR FEUERUNGSAUTOMAT BT3XX DISPLAY VOOR BRANDERAUTOMAAT BT3XX	AFFICHEUR POUR COFFRET BT3XX PANTALLA PARA PROGRAMADOR BT3XX	DISPLAY PER APPARECCHIATURA BT3XX	1
1560	65300992	ZENTRALSCHALTPULT BEDIENINGSPANEL	TABLEAU DE COMMANDE PANEL DE CONTROL	PANNELLO DI CONTROLLO	1
1570	65300993	KABELTUELLE DRAADDOORVOER D54/D47/D36	PASSE FIL D54/D47/D36 PASACABLE D54/D47/D36	PASSA FILO D54/D47/D36	1
1580	13009661	ABDECKUNG/SCHNITTSTELLE AFSLUITER / BEDIENINGSPANEEL	OBTURATEUR / PUPITRE OBTURADOR / TABLERO	OTTURATORE / QUADRO	1
1600	65301060	KABEL GDW.+STCK DIN/RAST3P L2000 BT3xx G.DRUKSCHAKEL.KABEL+DIN/RAST3P L2000 BT3	CABLE MANO GAZ+PRISE DIN/RAST3P L2000BT3 CABLE PRES.AIRE+TOMA DIN/RAST3P L2000BT3	CAVO PRESSOST.GAS+P. DIN/RAST3P L2000BT3	1
1610	65301061	KABEL GASVENTIL+STCK DIN/2XRAST3P L1600 KABEL GASKLEP+STCKDIN/2XRAST3P L1600	CABLE VANNE GAZ+PRISE DIN/2XRAST3P L1600 CABLE VALV.GAS+TOMA DIN/2XRAST3P L1600	CAVO VALVOLA GAS+PRESADIN/2XRAST3P L1600	1
1620	65301062	KABEL ZÜNDTRAFO+STCK 3P/RAST3P L600BT3xx KABEL ONTS.TRAFO+STCK 3P/RAST3P L600 BT3	CABLE ALLUMEUR+PRISE 3P/RAST3PL600BT3xx CABLE ENCENDEDOR+TOMA 3P/RAST3P L600 BT3	CAVO TRASFO ACC.+PRESA 3P/RAST3P L600BT3	1
1640	13012980	FOTOZELLE QRA 2 FLANSCH+COLLAR FOTOCEL QRA 2 FLENS+COLLAR	CELLULE QRA 2 BRIDE+COLLIER CELULA QRA 2 BRIDA+COLLAR	FOTOCELLULA QRA 2 FLANGE+COLLAR	1
1645	65301111	STELLANTRIEBKABEL STE+RAST6P/6P L1400 KABEL REGELMOTOR STE+RAST6P/6P L1400	CABLE SERVOMOTEUR STE+RAST6P/6P L1400 CABLE SERVOMOTOR STE+RAST6P/6P L1400	CAVO SERVOMOTORE STE+RAST6P/6P L1400	1
1655	65300046	KABEL LDW+RAST2P/2X0,75 L710 L.DRUKSCHAKEL.KABEL+RAST2P/2X0,75 L710	CABLE MANOSTAT AIR+RAST2P/2X0,75 L710 CABLE PRESOSTATO AIRE+RAST2P/2X0,75 L710	CAVO PRESSOST.ARIA+RAST2P/2X0,75 L710	1
1660	65301000	KABEL MOTOR+STECKER WIE. 4P 4X1,5 L560 KABEL MOTOR+STCKWIE. 4P 4X1,5 L560	CABLE MOTEUR+PRISE WIE. 4P 4X1,5 L560 CABLE MOTOR+TOMA WIE. 4P 4X1,5 L560	CAVO MOTORE+PRESA WIE. 4P 4X1,5 L560	1
1670	13009743	ZÜNDKABEL D6,35/D4 L750X2 KOERPER ONTSTEKINGSKABEL VG6 M/EK06.G (SET),L750	CABLE ALLUMAGE D6,35/D4 L750X2 CORPS CABLE ENCENDIDO D6,35/D4 L750X2 CUERPO	CAVO ACCENSIONE D6,35/D4 L750X2 CORPO	1
1675	13009800	KABEL MOTOR GMP+ STCK 3P. L1700 KABEL MOTOR GMP+STCK 3P. L1700	CABLE MOTEUR GMP+ PRISE 3P. L1700 CABLE MOTOR GMP+TOMA 3P L1700	CAVO MOTORE GMP+PRESA 3P L1700	1
1690	65312274	FLAMMENFUEHLER FFS08-UV1 659D31 - 5M FOTOCEL FFS08-UV1 659D31 - 5M W/O	CELLULE FFS08-UV1 659D31 - 5M W/O CELULA FFS08-UV1 659D31 - 5M W/O	CELLULA FFS08-UV1 659D31 - 5M W/O	1
1695	65312242	HALTER F. FLAMMENFUEHLER FFS06 STEUN FOTOCEL FFS06/FFS08	SUPPORT POUR CELLULE FFS06/FFS08 SOPORTE CELULA FFS06/FFS08	SUPPORTO FOTOCELLULA FFS06/FFS08	1
1696	65312275	KONSOLE LAM F152 659G0501 CONSOLE LAM F152 659G0501	CONSOLE LAM F152 659G0501 CONSOLA LAM F152 659G0501	CONSOLLE LAM F152 659G0501	1
1697	65326222	SPANNUNGSKABEL BT300/ LCM100 ODER F152 VOEDINGSKABEL BT300/ LCM100 OF F152	CABLE ALIMENTATION BT300/ LCM100 OU F152 CABLE ALIMENTACION BT300/ LCM100 O F152	CAVO ALIMENTAZIONE BT300/ LCM100 O F152	1
1698	65326221	KABEL / UV FOTOZELLE L 620 KABEL / UV FOTOZELLE L 620	CABLE CELLULE UV POUR BT3xx L 620 CABLE CELULA UV L620	CAVO CELLULA UV PER BT3xx L 620	1
1699	65312244	KABEL ANSCHLUSS BT300/LCM100 667P0515 KABEL ANSCHLUSS BT300/LCM100 667P0515	CABLE LIAISON BT300/LCM100 667P0515 CABLE DE CONEXION BT300/LCM100 667P0515	CAVO COLLEGA BT300/LCM100 667P0515	1
1700	65327124	FEUERUNGSAUTOMAT LCD 941.00 BT340 BRANDERAUTOMAAT LCD 941.00 BT340	COFFRET LCD 941.00 BT340 PROGRAMADOR LCD 941.00 BT340	APPARECCHIATURA LCD 941.00 BT340	1
1710	65311790	LCM100 (LSB-M 667R0500-1) LCM100-MODULE (LSB-M 667R0500-1)	MODULE LCM100 (LSB-M 667R0500-1) MÓDULO LCM100 (LSB-M 667R0500-1)	MODULO LCM100 (LSB-M 667R0500-1)	1
1715	65311791	DFM300 (LSB-M 667R0600-1) DFM300-MODULE (LSB-M 667R0600-1)	MODULE DFM300 (LSB-M 667R0600-1) MÓDULO DFM300 (LSB-M 667R0600-1)	MODULO DFM300 (LSB-M 667R0600-1)	1
1720	65311918	VSM100 (LSB-M 667R0200-1) VSM100-MODULE (LSB-M 667R0200-1)	MODULE VSM100 (LSB-M 667R0200-1) MÓDULO VSM100 (LSB-M 667R0200-1)	MODULO VSM100 (LSB-M 667R0200-1)	1
1800	65074309	SCHUTZ LOV BG0910A 230/50-60HZ CONTACT LOV BG0910A 230/50-60HZ	CONTACTEUR LOV BG0910A 230/50-60HZ CONTACTOR LOV BG0910A 230/50-60HZ	CONTATTORE LOV BG0910A 230/50-60HZ	1
1810	65075804	THERM. RELAIS LOV RF9 4.5-7.5A THERM. RELAIS LOV RF9 4.5-7.5A	RELAIS THERM. LOV RF9 4.5-7.5A RELE TERM. LOV RF9 4.5-7.5A	RELE TERM. LOV RF9 4.5-7.5A	1
1815	65074309	SCHUTZ LOV BG0910A 230/50-60HZ CONTACT LOV BG0910A 230/50-60HZ	CONTACTEUR LOV BG0910A 230/50-60HZ CONTACTOR LOV BG0910A 230/50-60HZ	CONTATTORE LOV BG0910A 230/50-60HZ	1
1820	65323150	RELAISSOCKEL FIN 94.74SMA RELAISDOOS FIN 94.74SMA	SOCLE RELAIS FIN 94.74SMA BASE DE RELE FIN 94.74SMA	ZOCCOLO RELE FIN 94.74SMA	1
1825	65323140	RELAIS FIN 55.34.8.230.0054 RELAIS FIN 55.34.8.230.0054	RELAIS FIN 55.34.8.230.0054 RELE FIN 55.34.8.230.0054	RELE FIN 55.34.8.230.0054	1
1830	13017720	RELAISSOCKEL 95.05 FIN HOUDER RELAIS FIN 95.05	SUPPORT RELAIS FIN 95.05 SOPORTE RELÉ FIN 95.05	SUPPORTO RELÈ FIN 95.05	1

	6XXXXXXX	DE NL	FR ES	IT	X
1835	13017721	RELAIS FIN 40.52 + KLAMMER RELAIS FIN 40.52 + CLIP	RELAIS FIN 40.52 + CLIP RELÉ FIN 40.52 + CLIP	RELÈ FIN 40.52 + CLIP	1
2020	13009712	STAUSCHEIBE D155/50 8SL R 7DRIL. STUWPLAAT D155/50 8SL R 7DRIL.	DEFLECTEUR D155/50 8SL R 7DRIL. DEFLECTOR D155/50 8SL R 7DRIL.	DIFFUSORE D155/50 8SL R 7DRIL.	1
	13018284	STAUSCHEIBE D168/50 8SL 6DRIL. STUWPLAAT D168/50 8SL 6DRIL.	DEFLECTEUR D168/50 8SL 6DRIL. DEFLECTOR D168/50 8SL 6DRIL.	DIFFUSORE D168/50 8SL 6DRIL.	1
2040	13009726	ZUENDELEKTROD.27X55 d6,4D2X23 45° +SCHR. ELEKTRODEBLOK V-G 05 /06 EK 05 /06 G /L	BLOC-ELECTRODES 27X55 d6,4D2X23 45° +VIS BLOQ.ELECTRO.27X55 d6,4D2X23 45°+TORNIL.	BLOC.ELETTRODI 27X55 d6,4D2X23 45° +VITE	1
2041	13010050	HALTER ZUENDELEKTRODE/IONISATIONSSTAB ONTSTEKINGSP. /IONISATIEP. HOUDER EK06G	SUPPORT/SONDE IONISATION SOPORTE ELECTRODO	SUPPORTO ELETTRODO	1
2046	13010049	SCHRAUBE M4-SPEZIAL SCHROEF M4 SPEC. KLEMVEER ELECTR.VG/L5/6	VIS EPAULEE M4/BLOC-ELECTRODES TORN.ALLEN M4/BLOQUE-ELECTRODOS	VITE CON SPALLAMENTO M4/BLOCCO ELETTRODI	1
2047	13009725	FLANSCH 20X11X2,6 FIX. ZUENDELEKTRODE KLEMVEER ELEKTRODEBLOCK V-G /L 5 / 6	BRIDE 20X11X2,6 FIX. ELECTRODE BRIDA 20X11X2,6 FIX. ELECTRODO	FLANGIA 20X11X2,6 FIX. ELETTRODO	1
2070	13009727	ZÜNDKABEL BERU D6,35/D6,35 L950 X2 KOPF ONTSTEKINGSKABEL VG6../EK06..G 2 STUKS	CABLE ALLUMAGE D6,35/D6,35 L950 X2 TETE CABLE ENCENDID.D6,35/D6,35 L950X2 CABEZA	CAVO ACCENSIONE D6,35/D6,35 L950X2 TESTA	1
2071	13010056	RUNDER STECKER ZÜNDKABEL ION X2 RONDE STEKKER KABEL ALU.ION X2	FICHE RONDE D6.4 CLAVIJA REDONDA CABLE ALU.ION X2	SPINA ROTONDA CAVO ACCENS.ION X2	1
2100	13018945	BRENNKOPF ZWEISTOFF L526 D156 BG. VLAMKOP DUAL FUEL L526 D156 BG.	TETE COMB.MIXTE L526 D156 CPL. CABEZA COMB.MIXTO L526 D156 CPL.	GRUPPO TESTA MISTO L526 D156 CPL.	1
	13018946	BRENNKOPF ZWEISTOFF L726 D156 BG. VLAMKOP DUAL FUEL L726 D156 BG.	TETE COMB.MIXTE L726 D156 CPL. CABEZA COMB.MIXTO L726 D156 CPL.	GRUPPO TESTA MISTO L726 D156 CPL.	1
	13018947	BRENNKOPF ZWEISTOFF L626 D156 BG. VLAMKOP DUAL FUEL L626 D156 BG.	TETE COMB.MIXTE L626 D156 CPL. CABEZA COMB.MIXTO L626 D156 CPL.	GRUPPO TESTA MISTO L626 D156 CPL.	1
2101	13014682	DÜS-STANGE D42/10 L526 3 DUESE ZWEISTOFF SPROEIERLIJNE D42/10 L526 3 SP.DUAL FUEL	LIGNE GICLEUR D42/10 L526 3 GICL.MIXTE LÍNEA BOQU.D42/10 L526 3 BOQU. DUAL FUEL	LINEA UGELLO D42/10 L526 3 UGELLI MISTO	1
	13014683	DÜS-STANGE D42/10 L726 3 DUESE ZWEISTOFF SPROEIERLIJNE D42/10 L726 3 SP.DUAL FUEL	LIGNE GICLEUR D42/10 L726 3 GICL. MIXTE LÍNEA BOQU.D42/10 L726 3 BOQU. DUAL FUEL	LINEA UGELLO D42/10 L726 3 UGELLI MISTO	1
	13014684	DÜS-STANGE D42/10 L626 3 DUESE ZWEISTOFF SPROEIERLIJNE D42/10 L626 3 SP.DUAL FUEL	LIGNE GICLEUR D42/10 L626 3 GICL. MIXTE LÍNEA BOQU.D42/10 L626 3 BOQU. DUAL FUEL	LINEA UGELLO D42/10 L626 3 UGELLI MISTO	1
2102	13009812	O-RING D6X2 NOZZLESTANG O-RING Ø6X2	O-RING D6X2 O-RING D6X2	O-RING D6X2	1
2120	13009732	GASBOGEN + ROHR T1/KN ELLEBOOG GAS + PIJP T1/KN	COUDE GAZ + TUBE T1/KN CODO GAS+TUBO T1/KN	GOMITO GAS + TUBO T1/KN	1
	13009733	GASBOGEN + ROHR T2/KL ELLEBOOG GAS + PIJP T2/KL	COUDE GAZ + TUBE T2/KL CODO GAS+TUBO T2/KL	GOMITO GAS + TUBO T2/KL	1
	13009734	GASBOGEN + ROHR T3/KM ELLEBOOG GAS + PIJP T3/KM	COUDE GAZ + TUBE T3/KM CODO GAS T3/KM	GOMITO GAS + TUBO T3/KM	1
2125	13009731	O-RING D75X4 O-RING D75X4	O-RING D75X4 O-RING D75X4	O-RING D75X4	1
2140	13009713	BRENNERROHR D227/172/190 L343 TURBU.D171 BRANDERBUIS D227/172/190 L343 TURBU.D171	TUBE FLAMME D227/172/190 L343 TURBU.D171 TUBO LLAMA D227/172/190 L343 TURBU.D171	BOCCAGLIO D227/172/190 L343 TURBU.D171	1
	13009714	BRENNERROHR D227/172/190 L543 TURBU.D171 BRANDERBUIS D227/172/190 L543 TURBU.D171	TUBE FLAMME D227/172/190 L543 TURBU.D171 TUBO LLAMA D227/172/190 L543 TURBU.D171	BOCCAGLIO D227/172/190 L543 TURBU.D171	1
	13009715	BRENNERROHR D227/172/190 L443 TURBU.D171 BRANDERBUIS D227/172/190 L443 TURBU.D171	TUBE FLAMME D227/172/190 L443 TURBU.D171 TUBO LLAMA D227/172/190 L443 TURBU.D171	BOCCAGLIO D227/172/190 L443 TURBU.D171	1
	13009716	BRENNERROHR D227/160/205 L343 TURBU.D171 BRANDERBUIS D227/160/205 L343 TURBU.D171	TUBE FLAMME D227/160/205 L343 TURBU.D171 TUBO LLAMA D227/160/205 L343 TURBU.D171	BOCCAGLIO D227/160/205 L343 TURBU.D171	1
	13009717	BRENNERROHR D227/160/205 L543 TURBU.D171 BRANDERBUIS D227/160/205 L543 TURBU.D171	TUBE FLAMME D227/160/205 L543 TURBU.D171 TUBO LLAMA D227/160/205 L543 TURBU.D171	BOCCAGLIO D227/160/205 L543 TURBU.D171	1
	13009718	BRENNERROHR D227/160/205 L443 TURBU.D171 BRANDERBUIS D227/160/205 L443 TURBU.D171	TUBE FLAMME D227/160/205 L443 TURBU.D171 TUBO LLAMA D227/160/205 L443 TURBU.D171	BOCCAGLIO D227/160/205 L443 TURBU.D171	1
2145	13009722	MESSNIPPEL GERADE R1/8Z-VERPACKT DRUKAANSLUITING R1/8	PRISE PRESSION R1/8 TOMA PRESIÓN R1/8	PRESA PRESSIONE R1/8	1
2146	13009721	VERSCHRAUBUNG PF + PL VERBINDING RECHT	RACCORD DROIT EMPALME RECTO	RACCORDO DESTRO	1
2147	13009816	ABDICHTUNGSPLATTE.RTC EQ. H-G PLAAT GESL.RTC VOLL. H-G	PLAQUE FERM.RTC EQ. H-G PLACA CIERRE RTC EQ. H-G	PIASTRA DI CHIUSURA RTC EQ. H-G	1
2148	13009817	D-STANGEDECKEL 174X90 D63/NC160-210/V6 DEKSEL SPROEIERLIJN 174X90 D63/NC210/V6	COUVERCLE LIG.GIC.174X90D63/NC160-210/V6 TAPA LINEA BOQU. 174X90 D63/NC160-210/V6	COPERCHIO LINEA UGEL.174X90 D63/NC210/V6	1
2150	13009719	DICHTUNG/BRENNERFLANSCH 335X326X3 D250 PAKKING/MONTAGEFLENS 335X326X3 D250	JOINT/BRIDE BRULEUR 335X326X3 D250 JUNTA/BRIDA QUEMADOR 335X326X3 D250	GUARNIZIONE/FLANGIA BRUC. 335X326X3 D250	1
2170	13009723	SCHRAUBEN-SET BRENNEROHR M8X20/VERPACKT KIT BEV.SCHROEF BRANDERBUIS (X3)	KIT VIS FIX. TUBE BRULEUR (X3) KIT TORN.FIJ. TUBO QUEMADOR (X3)	KIT VITI FISS. TUBO BRUCIATORE (X3)	1
2500	13009811	HYDRAUL.VERTEILER (3ALL) HYDRAUL. VERDELER VOLL. (3ALL)	DISTRIBUTEUR HYDRAULIQUE FIOUL EQ.(3ALL) DISTRIBUIDOR HIDRÁUL.EQ. (3ENC)	DISTRIBUTTORE IDRAULICO GASOLIO 3 STAD.	1
2510	13009813	ELEKTROVENTIL LUC 121F63 2/2NF9W MAGNEETKLEP LUC 121F63 2/2NF9W	ELECTROVANNE LUC 121F63 2/2NF9W ELECTROVÁLV. LUC 121F63 2/2NF9W	ELETTROVALVOLA LUC 121F63 2/2NF9W	1
2520	13009814	SPULE LUC 9W SPOEL LUCIFER 9W	BOBINE LUCIFER 9W BOBINA LUCIFER 9W	BOBINA LUCIFER 9W	1
	65300750	SPULE PAR 32MM 115V 14W SPOEL PAR 32MM 115V 14W	BOBINE PAR 32MM 115V 14W BOBINA PAR 32MM 115V 14W	BOBINA PAR 32MM 115V 14W	1

	6XXXXXXX	DE NL	FR ES	IT	X
2600	13009724	WELLE/SCHARNIER GEHAU.D12X210+D12X83 90° AS/SCHARN.LICHA.-HOOF.D12X210+D12X83 90°	AXE/CHARN. CORPS-TETE D12X210+D12X83 90° EJE/BISAGR.CUERPO-CAB.D12X210+D12X83 90°	PERNO/CERNIERA CORPO D12X210+D12X83 90°	1
2710	13010048	SCHRAUBENSET E-GAS ACCESSOIREKIT AARDGAS	ACCESS. KIT GAZ NATUREL ACCES. KIT GAS NATURAL	ACCESS. KIT GAS NATURALE	1
2711	13007041	SCHRAUBEN-SET F-GAS ACCESSOIREKIT PROPAAN	ACCESS. KIT PROPANE ACCES. KIT PROPANO	ACCESS. KIT PROPANO	1
2712	13010046	SCHIEBEHUELSEN-SET BRENNSTOFFKOPF GASHULS VG06..DP /M SET	OBTURATEUR/DIFFUSEUR GAZ OBTURADOR/DIFUSOR	OTTURATORE/DIFFUSORE	1
2714	13010047	GASDUESE D28 L170 6 SL.+RING (6 STCK) GAS VERSPR.D28 L170 6 SL.+RING (6 STCK)	DIFFUS. GAZ D28 L170 6 SL.+BAGUE (6 PCS) DIFUSOR GAS D28 L170 6 SL.+ANIL. (6 PZ)	INIETTORE GAS D28 L170 6 SL.+ANEL.(6 PZ)	1
2718	13014075	GASDUESE D6/4 L151 ZUENDEN GAS VERSPREIDER D6/4 L151 IGNITION	DIFFUSEUR GAZ D6/4 L151 ALLUMAGE DIFUSOR GAS D6/4 L151 ENCENDIDO	INIETTORE GAS D6/4 L151 ACCENSIONE	1
2785	13018948	GASKOPF L246 D156/75/14 6 DRIL.D25 GASKOP L246 D156/75/14 6 DRIL.D25	TETE GAZ L246 D156/75/14 6 PERC.D25 CABEZA GAS L246 D156/75/14 6 DRIL.D25	TESTA GAS L246 D156/75/14 6 FORI D25	1
3305	65300527	STELLANTR. STE4,5 B0.37/6-R M.KABEL L600 REGELMOTOR STE 4,5 B0.37/6-R +KABEL L600	SERVOMOTEUR STE4,5 B0.37/6-R +CABLE L600 SERVOMOTOR STE 4,5 BO37/6 R+CABLE L600	SERVOMOTORE STE 4,5 B0.37/6-R +CAVO L600	1
3310	65312327	HAUBE 125X79X73/STELLANTRIEB STE 4,5 KAP 125X79X73/REGELMOTOR STE 4,5	CAPOT 125X79X73/SERVOMOTEUR STE 4,5 CUBIERTA 125X79X73/SERVOMOTOR STE 4,5	COFANO 125X79X73/SERVOMOTORE STE 4,5	1
3312	65301268	GASKLAPPE 164X164 DN65 L200+STELLANT.STE GASKLEP 164X164 DN65 L200+REGELMOTOR STE	CLAPET GAZ 164X164 DN65 L200+SERVOM. STE VALVULA GAS 164X164 DN65 L200+SERVOM.STE	VALV.FARFALLA 164X164 DN65 L200+SERV.STE	1
3317	65301267	DREH-ANSCHLAG F. WELLE STE4.5 0.8NM AANSLAG ROT. /AS STE 4.5 0,8 NM	BUTEE ARRET ROTAT./AXE STE4.5 0.8NM TOPE ROTACION/EJE STE4.5 0.8NM	PERNO ARRESTO ROTAZ. ALBERO STE4.5 0.8NM	1
3319	65312458	KABELDURCHFUEHRUNG DIM.34X15/12 D.6,2 DRAADDOORVOER DIM.34X15/12 D.6,2	PASSE-FIL DIM.34X15/12 D.6,2 PASACABLE DIM.34X15/12 D.6,2	PASSA FILO DIM.34X15/12 D.6,2	1
3335	13010078	GASDRUCKWACHTER GW 150 A5 5-150MB GASDRUKSCHAKELAAR GW 150 A5 5-150MB	MANOSTAT GAZ GW 150 A5 5-150MB PRESOSTATO GAS GW 150 A5 5-150MB	PRESSOSTATO GAS GW 150 A5 5-150MB	1
3350	13009693	GASANSCHLUSSROHR KPL.R11/4Z 350/500X0.12 VOLSLAGEN GASCOLLECTORPIJP RP2	COLLECTEUR CPL. RP2 COLECTOR CPL. RP2	COLLETTORE ACC. RP2	1
3352	13009722	MESSNIPPEL GERADE R1/8Z-VERPACKT DRUKAANSLUITING R1/8	PRISE PRESSION R1/8 TOMA PRESIÓN R1/8	PRESA PRESSIONE R1/8	1
3360	13022996	GASVENTIL MBC700 SE S82 RP1 1/4+GW150 GASKLEP MBC700 SE S82 RP1 1/4+GW150	VANNE GAZ MBC700 SE S82 RP1 1/4+GW150 VALVULA GAS MBC700 SE S82 RP1 1/4+GW150	VALVOLA GAS MBC700 SE S82 RP1 1/4+GW150	1
	65300008	GASVENTIL MBC1200 SE S82 RP2+GDW GW150 GASKLEP MBC1200 SE S82 RP2+GPS GW150	VANNE GAZ MBC1200 SE S82 RP2+GPS GW150 VALVULA GAS MBC1200 SE S82 RP2+GPS GW150	VALVOLA GAS MBC1200 SE S82 RP2+GPS GW150	1
3370	13022416	FILTEREINSATZ MBC 700 FILTERELEMENT MBC 700	ELEMENT FILTRANT MBC 700 ELEMENTO FILTRANTE MBC 700	ELEMENTO FILTRANTE MBC 700	1
	13022417	FILTEREINSATZ MBC 1200 FILTERELEMENT MBC 1200	ELEMENT FILTRANT MBC 1200 ELEMENTO FILTRANTE MBC 1200	ELEMENTO FILTRANTE MBC 1200	1
3400	65301065	O-RINGSATZ D70+D74X3+D115/77/MBC700-1200 O-RINGSET D70+D74X3+D115/77/MBC700-1200	KIT O-RING D70+D74X3+D115/77/MBC700-1200 KIT O-RING D70+D74X3+D115/77/MBC700-1200	KIT O-RING D70+D74X3+D115/77/MBC700-1200	1
3450	65322637	FLANSCH MB415/420 RP1 1/2 + DRUCKSTOPFEN FLENS MB415/420 RP1 1/2 + DRUKPLUG	BRIDE MB415/420 RP1 1/2 + PRISE PRESSION BRIDA MB415/420 RP1 1/2 + TOMA DE PRES.	FLANGIA MB415/420 RP1 1/2 + PRESA PRESS.	1
3505	65300527	STELLANTR. STE4,5 B0.37/6-R M.KABEL L600 REGELMOTOR STE 4,5 B0.37/6-R +KABEL L600	SERVOMOTEUR STE4,5 B0.37/6-R +CABLE L600 SERVOMOTOR STE 4,5 BO37/6 R+CABLE L600	SERVOMOTORE STE 4,5 B0.37/6-R +CAVO L600	1
3510	65312327	HAUBE 125X79X73/STELLANTRIEB STE 4,5 KAP 125X79X73/REGELMOTOR STE 4,5	CAPOT 125X79X73/SERVOMOTEUR STE 4,5 CUBIERTA 125X79X73/SERVOMOTOR STE 4,5	COFANO 125X79X73/SERVOMOTORE STE 4,5	1
3512	65301268	GASKLAPPE 164X164 DN65 L200+STELLANT.STE GASKLEP 164X164 DN65 L200+REGELMOTOR STE	CLAPET GAZ 164X164 DN65 L200+SERVOM. STE VALVULA GAS 164X164 DN65 L200+SERVOM.STE	VALV.FARFALLA 164X164 DN65 L200+SERV.STE	1
3517	65301267	DREH-ANSCHLAG F. WELLE STE4.5 0.8NM AANSLAG ROT. /AS STE 4.5 0,8 NM	BUTEE ARRET ROTAT./AXE STE4.5 0.8NM TOPE ROTACION/EJE STE4.5 0.8NM	PERNO ARRESTO ROTAZ. ALBERO STE4.5 0.8NM	1
3519	65312458	KABELDURCHFUEHRUNG DIM.34X15/12 D.6,2 DRAADDOORVOER DIM.34X15/12 D.6,2	PASSE-FIL DIM.34X15/12 D.6,2 PASACABLE DIM.34X15/12 D.6,2	PASSA FILO DIM.34X15/12 D.6,2	1
3600	65301067	GASVENTIL MBC1900 SE DN65+GDW GW150 GASKLEP MBC1900 SE DN65+GPS GW150	VANNE GAZ MBC1900 SE DN65+MANO GAZ GW150 VALVULA GAS MBC1900 SE DN65+P.GAS GW150	VALVOLA GAS MBC1900 SE DN65+P.GAS GW150	1
3630	13010078	GASDRUCKWACHTER GW 150 A5 5-150MB GASDRUKSCHAKELAAR GW 150 A5 5-150MB	MANOSTAT GAZ GW 150 A5 5-150MB PRESOSTATO GAS GW 150 A5 5-150MB	PRESSOSTATO GAS GW 150 A5 5-150MB	1
3700	65301066	O-RINGSATZ D70X3+ D115/77(2)/MBC1900/VGD O-RINGSET D70X3+ D115/77(2)/MBC1900/VGD	KIT O-RING D70X3+ D115/77(2)/MBC1900/VGD KIT O-RING D70X3+ D115/77(2)/MBC1900/VGD	KIT O-RING D70X3+ D115/77(2)/MBC1900/VGD	1
3910	13009703	OP-GASFILTER DN65 OP-GASFILTER DN65	OP-FILTRE GAZ DN65 FILTRO GAS EXTERNO DN65	OP-FILTRO GAS DN65	1
3911	13009704	FILTEREINSATZ DN65 /ANELLO FILTERELEMENT DN65 /ANELLO	ELEMENT FILTRANT DN65 /ANELLO ELEMENTO FILTRANTE DN65 /ANELLO	ELEMENTO FILTRANTE DN65 /ANELLO	1
4005	65300527	STELLANTR. STE4,5 B0.37/6-R M.KABEL L600 REGELMOTOR STE 4,5 B0.37/6-R +KABEL L600	SERVOMOTEUR STE4,5 B0.37/6-R +CABLE L600 SERVOMOTOR STE 4,5 BO37/6 R+CABLE L600	SERVOMOTORE STE 4,5 B0.37/6-R +CAVO L600	1
4010	65312327	HAUBE 125X79X73/STELLANTRIEB STE 4,5 KAP 125X79X73/REGELMOTOR STE 4,5	CAPOT 125X79X73/SERVOMOTEUR STE 4,5 CUBIERTA 125X79X73/SERVOMOTOR STE 4,5	COFANO 125X79X73/SERVOMOTORE STE 4,5	1
4012	65301268	GASKLAPPE 164X164 DN65 L200+STELLANT.STE GASKLEP 164X164 DN65 L200+REGELMOTOR STE	CLAPET GAZ 164X164 DN65 L200+SERVOM. STE VALVULA GAS 164X164 DN65 L200+SERVOM.STE	VALV.FARFALLA 164X164 DN65 L200+SERV.STE	1
4017	65301267	DREH-ANSCHLAG F. WELLE STE4.5 0.8NM AANSLAG ROT. /AS STE 4.5 0,8 NM	BUTEE ARRET ROTAT./AXE STE4.5 0.8NM TOPE ROTACION/EJE STE4.5 0.8NM	PERNO ARRESTO ROTAZ. ALBERO STE4.5 0.8NM	1
4019	65312458	KABELDURCHFUEHRUNG DIM.34X15/12 D.6,2 DRAADDOORVOER DIM.34X15/12 D.6,2	PASSE-FIL DIM.34X15/12 D.6,2 PASACABLE DIM.34X15/12 D.6,2	PASSA FILO DIM.34X15/12 D.6,2	1

	6XXXXXXX	DE NL	FR ES	IT	X
4030	13020958	KABEL ANSCHLUSS AGA 62 STCK DIN L270 KABEL VERBINDING AGA 62 PLUG DIN L270	CABLE CONNECT AGA 62 PRISE DIN L270 CABLE CONEXION AGA 62 TOMA DIN L270	CAVO COLLEGA AGA 62 PRESA DIN L270	1
4100	65323661	GAS-MV VGD 40.065 GASKLEP VGD40 065 DN65	VANNE GAZ VGD40 065 DN65 VÁLVULA GAS VGD40 065 DN65	VALVOLA GAS VGD40 065 DN65	1
4102	65107100	STELLANTRIEB SKP25.003E2 O. ENDSCHALTER REGELMOT. GAS SKP25.003E2 Z.EINDSCHALTE	SERVOMOT. GAZ SKP25.003E2 S.FIN COURSE SERVOMOTOR SKP25.003 E2 SIN FIN CARRERA	SERVOMOT. GAS SKP25.003E2 S.FINE CORSA	1
4105	13020951	STELLANTRIEB SKP 15.000E2 O.ENDSCHALTER SERVOMOTOR SKP 15 000E2 ZONDER EINDSCHAK	SERVOMOT. GAZ SKP15.000E2 S.FIN COURSE SERVOMOT. GAS SKP15.000E2 S.TOPE	SERVOMOT. GAS SKP15.000E2 S.FINECORSA	1
4110	13010078	GASDRUCKWACHTER GW 150 A5 5-150MB GASDRUKSCHAKELAAR GW 150 A5 5-150MB	MANOSTAT GAZ GW 150 A5 5-150MB PRESOSTATO GAS GW 150 A5 5-150MB	PRESSOSTATO GAS GW 150 A5 5-150MB	1
4150	65301068	DRUCKABNAHMEROHR+VERSCHR. GASDRUKBUIS MET AANSLUITING	TUBE DE PRESSION GAZ AVEC RACCORD TUBO PRESIÓN GAS CON RACOR	TUBO DELLA PRESSIONE GAS CON RACCORDO	1
4160	13023188	WINKELVERSCHRAUBUNG GEBOGEN AANSLUITING	RACCORD COUDE RACOR ACODADO	RACCORDO A GOMITO	1
4170	13009721	VERSCHRAUBUNG PF + PL VERBINDING RECHT	RACCORD DROIT EMPALME RECTO	RACCORDO DESTRO	1
4200	65301066	O-RINGSATZ D70X3+ D115/77(2)/MBC1900/VGD O-RINGSET D70X3+ D115/77(2)/MBC1900/VGD	KIT O-RING D70X3+ D115/77(2)/MBC1900/VGD KIT O-RING D70X3+ D115/77(2)/MBC1900/VGD	KIT O-RING D70X3+ D115/77(2)/MBC1900/VGD	1
4410	13009703	OP-GASFILTER DN65 OP-GASFILTER DN65	OP-FILTRE GAZ DN65 FILTRO GAS EXTERNO DN65	OP-FILTRO GAS DN65	1
4411	13009704	FILTEREINSATZ DN65 /ANELLO FILTERELEMENT DN65 /ANELLO	ELEMENT FILTRANT DN65 /ANELLO ELEMENTO FILTRANTE DN65 /ANELLO	ELEMENTO FILTRANTE DN65 /ANELLO	1
5010	65311362	PRUEFBRENNER M.DRUCKKNOPFHAHN PB2 PROEFBRANDER MET DRUKKNOP PB2	BRULEUR ESSAI AVEC B. POUSSOIR PB2 QUEMADOR DE PRUEBA CON PULSADOR PB2	BRUCIATORE DI PROVA CON PULSANTE PB2	1
5130	65326220	MAX. GASDRUCKWAECHTER UB50 A2+KABEL L600 GASDRUKSCHAKELAAR MAX.UB50 A2+KABEL L600	PRESSOSTAT GAZ MAX. UB50 A2+CABLE L600 PRESOSTATO GAS MAX.UB50 A2+CABLE L600	PRESSOSTATO GAS MASS.UB50 A2+CAVO L600	1

	6XXXXXXX	RU TR	PT	PL	X
1005	13009640	ПРОКЛАДКА/ВОЗДУШН.КАМЕРА 109X6X7 ПРОФИЛ. CONTASI/HAVA KUTUSU 109X6X7 PROFILLI	GAXETA/CAIXA DE AR 109X6X7 PERFILADO	USZCZELKA/KOMORA POWIET. 109X6X7 PROFIL.	1
1020	13009641	ИЗОЛЯЦИЯ ВОЗДУХОЗАБОРНИКА HAVA KUTUSU YALITIMI	ISOLAMENTO CAIXA DE ENTRADA DE AR	USZCZELKA SKRZYNKI POWIETRZA	1
1041	65326804	СЕРВОДВИГАТ.STE4,5Q3.51/6L 3NM+CAB.L1000 SERVOMOTOR STE 4,5 Q3.51/6 L 3NM	SERVOMOTOR STE4,5 Q3.51/6L 3NM+CAB.L1000	SERWOMOTOR STE4,5 Q3.51/6L 3NM+CAB.L1000	1
1051	65326227	ВОЗДУШНАЯ ЗАСЛОНКА В СБОРЕ V6/NC160-210 DONANIMLI HAVA KLAPESI V6/NC160-210	FLAP DE AR EQUIP. V6/NC160-210	PRZEPUSTNICA PO.Z OSPRZĘTEM V6/NC160-210	1
1071	65326226	ДЕРЖАТЕЛЬ СЕРВОДВИГАТЕЛЬ DESTEĞI SERVOMOTOR	SUPORTE SERVOMOTOR	WSPORNIK SERWOMOTOR	1
1080	13010055	ПРОКЛАДКА/КОРПУС-ГОЛОВА D218X8/5X10 CONTASI/KARTER-KAFA D218X8/5X10	GAXETA/CARCAÇA-CABECA D218X8/5X10	USZCZELKA/OBUDOWA-GŁOWA D218X8/5X10	1
1090	13016845	МУФТА ПРОПУСКА ПРОВОДА/КАРТЕР KABLO KANALI/KARTER	PASSA-CABOS/CAIXA	PRZELOTKA PRZEWODU/OBUDOWA	1
1100	65301016	КОЖУХ СЕРЫЙ 590X547X476+ВИНТ/V 5-6 KAPAĞI GRI 590X547X476+VIDASI/V 5-6	COBERTURA CINZA 590X547X476+PARAF./V 5-6	OSŁONA SZARY 590X547X476+SRUBA/V 5-6	1
1101	65300519	ВИНТ С ПЛОСКОЙ ГОЛОВКОЙ M5X15 DÜZ BAŞLI VIDA M5X15	PARAFUSO CABEÇA PLANA M5X15	ŚRUBA Z ŁBEM NITOWYM PŁASKIM M5X15	1
1102	13009772	ПРОКЛАДКА/КОЖУХ 10X3 L1000 CONTASI/KAPAĞI 10X3 L1000	GAXETA/COBERTURA 10X3 L1000	USZCZELKA/OSŁONA 10X3 L1000	1
1105	65326446	ПРИВОДЫ ACS150 3KW SÜRÜCÜLER ACS150 3KW	CONVERSOR FREQ. ACS150 3KW	PRZETWORNICA ACS150 3KW	1
1107	65326448	ЭЛЕКТРОДВИГАТ.2,2KW+ДАТЧИК/ВАРИАТОРА MOTORU 2,2KW+SENSÖR/HIZ VARYATÖR	MOTOR 2,2KW+SENSOR INDUCT./VARIADOR	SILNIK 2,2KW+ROTAT.CZUJNIK/REGULACJĄ	1
	65326449	ЭЛЕКТРОДВИГАТ.2,5KW+ДАТЧИК/ВАРИАТОРА MOTORU 2,5KW+SENSÖR/HIZ VARYATÖR	MOTOR 2,5KW+SENSOR INDUCT./VARIADOR	SILNIK 2,5KW+ROTAT.CZUJNIK/REGULACJĄ	1
1108	65312550	ДАТЧИК NAMUR D25 SENSÖR NAMUR D25	SENSOR NAMUR D25	CZUJNIK NAMUR D25	1
1140	13010008	СМОТРОВОЕ СТЕКЛО RÖGAR CAMI	VIGIA	SZKŁO PODGLĄDU	1
1145	13014004	ПРОХОДНАЯ ВТУЛКА ДЛЯ ПРОВОДОВ KABLO KANALI	PASSA-CABO	DŁAWNICA KABLOWA	1
1150	65326967	КОНДЕНСАТОР 22µF 2P 3MM KONDENSATOR 22µF 2P 3MM	CAPACITOR 22µF 2P 3MM	KONDENSATOR 22µF 2P 3MM	1
1165	13009807	ДВИГАТЕЛЬ 0,45KW 230V D12,7 GMP 0,45KW 230V D12,7 GMP MOTOR	MOTOR 0,45KW 230V D12,7 GMP	SILNIK 0,45KW 230V D12,7 GMP	1
1170	13009748	ВОЗДУШНЫЙ ВЫПРЯМИТЕЛЬ 148/162 4BL. HAVA DÜZELTİCİ 148/162 4BL.	RECICLAGEM DE AR 148/162 4BL.	PROSTOWNIK POWIETRZA 148/162 4ŁOP.	1
1172	13009806	СОЕД. МУФТА НАСОС/ДВИГАТЕЛЬ H-B POMPA/H-B MOTOR AKUPLEMANI	ACOPLAMENTO BOMBA/MOTOR H-B	SPRZĘGŁO POMPY/SILNIKA H-B	1
1175	13009802	МАЗУТНЫЙ НАСОС AJ6 CC 1004 AJ6 CC 1004 YAKIT POMPASI	BOMBA DE COMBUSTÍVEL AJ6 CC 1004	POMPA PALIWA AJ6 CC 1004	1
1180	13014194	ФИЛЬТР ТОПЛИВА 150µ / НАСОС AJ6 FILTRE OIL 150µ / POMPA AJ6	FILTRO OIL 150µ / BOMBA AJ6	FILTR OIL 150µ / POMPA AJ6	1
1181	13014193	ПРОКЛАДКА/КОЖУХ-НАСОС SUN AJ CONTASI/KAPAK-POMPA SUN AJ	GAXETA/COBERTURA-BOMBA SUN AJ	USZCZELKA/OSŁONA-POMPA SUN AJ	1
1190	13009736	ТУРБИНА D240X114 d24 D240X114 d24 TÜRBİN	TURBINA D240X114 d24	WIMIK D240X114 d24	1
	13009737	ТУРБИНА D250X114 d24 D250X114 d24 TÜRBİN	TURBINA D250X114 d24	WIMIK D250X114 d24	1
1200	13020723	КРОНШТЕЙН ПНЕВМОРЕЛЕ Д32 HAVA BASINÇ ŞALTERI MESNEDI D32	BASE MANÓSTATO AR D32	WSPORNIK CZUJNIKA CIŚNI. POWIET. D32	1
1201	13014419	ШТУЦЕР/ШЛАНГ G1/4/M16X1,5 G1/4/M16X1,5 RAKOR/HORTUM	CONECTOR/MANGUEIRA G1/4/M16X1,5	ZŁĄCZE/USZCZELKA G1/4/M16X1,5	1
1202	13014676	ШТУЦЕР/ШЛАНГ G1/8/M14X1,5 G1/8/M14X1,5 RAKOR/HORTUM	CONECTOR/MANGUEIRA G1/8/M14X1,5	ZŁĄCZE/USZCZELKA G1/8/M14X1,5	1
1203	13009815	ШЛАНГ МАЗУТН., ДЛ. 1,5 M L 1.5M YAKIT HORTUMU	MANGUEIRA COMBUSTÍVEL C. 1,5M	PRZEWÓD PALIWOWY L 1,5 M	1
1205	13009809	ШЛАНГ M14X1,5X2 L1300 M14X1,5X2 L1300 HORTUM	MANGUEIRA M14X1,5X2 C1300	USZCZELKA M14X1,5X2 L1300	1
1210	65300021	РЕЛЕ ДАВ. ВОЗДУХА 604.92 1-10MB HAVA BASINÇ ŞALT. 604.92 1-10MB	MANÓSTATO DE AR 604.92 1-10MB	CZUJNIK CIŚ. POW. 604.92 1-10MB	1
1220	13009739	ДВИГАТЕЛЬ 2,2KW230/400V D24+РАЗЪЕМ MOTOR 2,2KW230/400V D24+PRİZ	MOTOR 2,2KW230/400V D24+PLUGUE	SILNIK 2,2 KW 230/400 V D24 + GNIAZDO	1
	13009740	ДВИГАТЕЛЬ 2,5KW230/400V D24+РАЗЪЕМ MOTOR 2,5KW230/400V D24+PRİZ	MOTOR 2,5KW230/400V D24+PLUGUE	SILNIK 2,5 KW 230/400 V D24 + GNIAZDO	1
1230	13014337	ТРУБКА ПВХ ПРОЗРАЧНЫЙ D4/6 TÜP D4/6	TUBO PVC TRANSPARENTE D4/6	RURKA D4/6	1
1235	13009738	РОЗЕТКА ВОЗДУШНОЕ ДАВЛЕНИЕ НЕОБ.D0,7L145 PRIZ HAVA BASINCI BAĞLANTI ELE.D0,7 L145	TOMADA PRESSÃO AR TUBEIRA D0,7 L145	WTYCZKA CIŚNIEN.POW.PRZYSTAWKA D0,7 L145	1
1422	65321365	КРЫШКА РАСПОЛОЖЕНИЕ ФОТОЭЛЕМЕНТ HÜCRE KONUMU IÇIN KAPAK	TAMPA PARA LOCALIZAÇÃO FOTOCÉLULA	POKRYCIE LOKALIZACJI FOTOKOMÓRKI	1

	6XXXXXXX	RU TR	PT	PL	X
1505	13014716	КАБЕЛЬ ЭЛЕКТРОК.+DIN/WI.5P L1500VS+1+2+3 KABLOSU EL.VANA+DIN/WIE.5P L1500VS+1+2+3	CABO EL.VALV.+T.DIN/WI.5P L1500VS+1+2+3	PRZEWÓD EL.ZAWOR+DIN/WI.5P L1500VS+1+2+3	1
1510	13009663	ТРАНСФО РОЗЖИГА EBI 2X7,5 230V ATEŞLEME TRAFO. EBI 2X7,5 230V	TRANSFO IGNIÇÃO EBI 2X7,5 230V	TRANSFO ZAPŁONOWY EBI 2X7,5 230V	1
1511	13014120	КАБЕЛЬ ЭЛЕКТРОКЛ.+P.WIE.5P 5X0,75 L1250 KABLOSU EL.VANA+PL.WIE. 5P 5X0,75 L1250	CABO EL.VALV.+TOM. WIEL.5P 5X0,75 L1250	PRZEWÓD EL.ZAWOR+PL.WIE.5P 5X0,75 L1250	1
1525	65327806	ПРЕДОХРАНИТЕЛЬ 5X20F STD 10A 250V SIGORTA 5X20F STD 10A 250V	FUSIVEL 5X20F STD 10A 250V	BEZPIECZNIK 5X20F STD 10A 250V	1
1530	13010007	ПЕРЕКЛЮЧАТЕЛЬ ON-OFF ŞALTER	INTERRUPTOR ON-OFF	PRZEŁĄCZNIK	1
1540	13014009	ПЕРЕКЛЮЧАТЕЛЬ ŞALTER	INTERRUPTOR - FUNCIONAMENTO	PRZEŁĄCZNIK	1
1545	13014009	ПЕРЕКЛЮЧАТЕЛЬ ŞALTER	INTERRUPTOR - FUNCIONAMENTO	PRZEŁĄCZNIK	1
1550	65326869	ДИСПЛЕЙ БЛОКА УПРАВЛЕНИЯ BT3XX EKRAN KUTU BT3XX	VISOR UNIDADE DE CONTROLE BT3XX	WYŚWIETLACZ MODUŁ BT3XX	1
1560	65300992	ПАНЕЛЬ УПРАВЛЕНИЯ KONTROL PANELI	PAINEL DE CONTROLE	TABLICA WSKAŹNIKÓW	1
1570	65300993	МУФТА ПРОКЛАДКИ ПРОВОДА Д54/Д47/Д36 KABLO KANALI D54/D47/D36	PASSA-CABOS D54/D47/D36	PRZELOTKA PRZEWODU D54/D47/D36	1
1580	13009661	ЗАТВОР/ПУЛЬТ TAPA / KONTROL PANELİ	OBTURADOR INTERFACE	PRZEPUSTNICA / PULPIT	1
1600	65301060	КАБЕЛЬ Р.ДАВ.ГАЗА+PL.DIN/RAST3P L2000BT3 GAZ BAS.ŞALT.KABLOSU+DIN/RAST3P L2000BT3	CABO PRESSOST.GAS+T. DIN/RAST3P L2000BT3	PRZEWÓD CZUJ.CIŚ.GAZ+DIN/RAST3P L2000BT3	1
1610	65301061	КАБЕЛЬ ГАЗО.КЛАПАН+PL.DIN/2XRAST3P L1600 GAZ VANASI KABLOSU+PL.DIN/2XRAST3P L1600	CABO VALVULA GAS+TOM.DIN/2XRAST3P L1600	PRZEWÓD ZAWÓR GAZOWY+DIN/2XRAST3P L1600	1
1620	65301062	КАБЕЛЬ ТРАНС.РОЗЖИ.+PL.3P/RAST3P L600BT3 KABLOSU ATEŞL.TRAF.+PL.3P/RAST3P L600BT3	CABO TRAN.IGNIÇÃO+TOM.3P/RAST3P L600 BT3	PRZEWÓD TRAN.ZAPŁ.+PLUG3P/RAST3P L600BT3	1
1640	13012980	ФОТОРЕЗИСТОР QRA 2 ФЛАНЕЦ+COLLAR TURUNCU HÜCRE 2 FLANŞ + BİLEZİK	CELULA QRA 2 FLANGE+COLLAR	KOMÓRKA QRA 2 FLANGE+COLLAR	1
1645	65301111	КАБЕЛЬ СЕРВОДВИГАТЕЛЬ+PL.6P/RAST6P L1400 SERVOMOTOR KABLOSU+PLUG6P/RAST6P L1400	CABO SERVOMOTOR STE+RAST6P/6P L1400	PRZEWÓD SERWOMOTOR+PLUG6P/RAST6P L1400	1
1655	65300046	КАБЕЛЬ Р.ДАВ. ВОЗДУХА+RAST2P/2X0,75 L710 HAVA BAS.ŞALT.KABLOSU+RAST2P/2X0,75 L710	CABO PRESSOST.AR+RAST2P/2X0,75 L710	PRZEWÓD CZUJ.CIŚ.POW.+RAST2P/2X0,75 L710	1
1660	65301000	КАБЕЛЬ ЭЛ.ДВИГАТЕЛЬ+P.WIE.4P 4X1,5 L560 MOTORU KABLOSU+PLUGWIE. 4P 4X1,5 L560	CABO MOTOR+TOMADA WIEL.4P 4X1,5 L560	PRZEWÓD SILNIK+PLUGWIE. 4P 4X1,5 L560	1
1670	13009743	КАБЕЛЬ РОЗЖИГАD6,35/D4 L750X2 КОРПУС ATEŞLEME KABLOSU D6,35/D4 L750X2 GÖVDESİ	CABO ENCENDIDO D6,35/D4 L750X2 CORPO	PRZEWÓD ALU. D6,35/D4 L750X2 CIAŁO	1
1675	13009800	КАБЕЛЬ MOTOR GMP+PLUG 3P. L1700 KABLOSU MOTOR GMP+PLUG 3P. L1700	CABO MOTOR GMP+PLUG 3P. L1700	PRZEWÓD MOTOR GMP+PLUG 3P. L1700	1
1690	65312274	ФОТОРЕЗИСТОР FFS08-UV1 659D31 - 5M W/O HÜCRE FFS08-UV1 659D31 - 5M W/O	FOTOCÉLULA FFS08-UV1 659D31 - 5M W/O	FOTOKOMÓRKA FFS08-UV1 659D31 - 5M W/O	1
1695	65312242	ДЕРЖАТЕЛЬ ФОТОРЕЗИСТОР FFS06/FFS08 DESTEĞI HÜCRE FFS06/FFS08	SUPORTE CELULA FFS06/FFS08	WSPORNIK FOTOKOMÓRKA FFS06/FFS08	1
1696	65312275	КОНСОЛЬ LAM F152 659G0501 KONSOL LAM F152 659G0501	CONSOLE LAM F152 659G0501	KONSOLA LAM F152 659G0501	1
1697	65326222	СИЛОВОЙ КАБЕЛЬ BT300/ LCM100 ИЛИ F152 GÜÇ KABLOSU BT300/ LCM100 VEYA F152	CABO ALIMENTACAO BT300/ LCM100 OU F152	KABEL ZASILAJĄCY BT300/ LCM100 LUB F152	1
1698	65326221	КАБЕЛЬ CELL UV L 620 KABLOSU CELL UV L 620	CABO CELL UV L 620	PRZEWÓD CELL UV L 620	1
1699	65312244	СОЕДИНИТЕЛ.КАБЕЛЬ BT300/LCM100 667P0515 BAĞLANTI KABLOSU BT300/LCM100 667P0515	CABO DE CONEXÃO BT300/LCM100 667P0515	POŁĄCZENIOW. KABEL BT300/LCM100 667P0515	1
1700	65327124	БЛОК УПРАВЛЕНИЯ LCD 941.00 BT340 KUTU LCD 941.00 BT340	PROGRAMADOR LCD 941.00 BT340	MODUŁ LCD 941.00 BT340	1
1710	65311790	МОДУЛЬ LCM100 (LSB-M 667R0500-1) MODÜLÜ LCM100 (LSB-M 667R0500-1)	MÓDULO LCM100 (LSB-M 667R0500-1)	MODUL LCM100 (LSB-M 667R0500-1)	1
1715	65311791	МОДУЛЬ DFM300 (LSB-M 667R0600-1) MODÜLÜ DFM300 (LSB-M 667R0600-1)	MÓDULO DFM300 (LSB-M 667R0600-1)	MODUL DFM300 (LSB-M 667R0600-1)	1
1720	65311918	МОДУЛЬ VSM100 (LSB-M 667R0200-1) VSM100 MODÜLÜ (LSB-M 667R0200-1)	MÓDULO VSM100 (LSB-M 667R0200-1)	MODUL VSM100 (LSB-M 667R0200-1)	1
1800	65074309	ВЫКЛЮЧАТЕЛЬ LOV BG0910A 230/50-60HZ KONTAKTÖR LOV BG0910A 230/50-60HZ	CONTACTOR LOV BG0910A 230/50-60HZ	STYCZNIK LOV BG0910A 230/50-60HZ	1
1810	65075804	ТЕПЛОВОЕ РЕЛЕ LOV RF9 4.5-7.5A TERMIK RÖLE LOV RF9 4.5-7.5A	RELE TERM. LOV RF9 4.5-7.5A	PRZEKAŹNIK TERMICZNY LOV RF9 4.5-7.5A	1
1815	65074309	ВЫКЛЮЧАТЕЛЬ LOV BG0910A 230/50-60HZ KONTAKTÖR LOV BG0910A 230/50-60HZ	CONTACTOR LOV BG0910A 230/50-60HZ	STYCZNIK LOV BG0910A 230/50-60HZ	1
1820	65323150	РЕЛЕЙНАЯ БАЗА FIN 94.74SMA RÖLE TABANI FIN 94.74SMA	BASE DO RELE FIN 94.74SMA	PODSTAWA PRZEKAŹNIKA FIN 94.74SMA	1
1825	65323140	РЕЛЕ FIN 55.34.8.230.0054 RÖLE FIN 55.34.8.230.0054	RELE FIN 55.34.8.230.0054	PRZEKAŹNIK FIN 55.34.8.230.0054	1
1830	13017720	ДЕРЖАТЕЛЬ РЕЛЕ FIN 95.05 95.05 FİN RÖLE KAİDESİ	SUPORTE RELÉ FIN 95.05	WSPORNIK PRZEKAŹNIKA FIN 95.05	1

	6XXXXXXX	RU TR	PT	PL	X
1835	13017721	РЕЛЕ FIN 40.52 + ЗАЖИМ RÖLE FIN 40.52 + KLİP	RELÉ FIN 40.52 + MOLAS	PRZEKAŹNIK FIN 40.52 + CLIP	1
2020	13009712	ДЕФЛЕКТОР D155/50 8SL R 7DRIL. DEFLEKTOR D155/50 8SL R 7DRIL.	DEFLECTOR D155/50 8SL R 7DRIL.	DEFLEKTOR D155/50 8SL R 7DRIL.	1
	13018284	ДЕФЛЕКТОР D168/50 8SL 6DRIL. DEFLEKTOR D168/50 8SL 6DRIL.	DEFLECTOR D168/50 8SL 6DRIL.	DEFLEKTOR D168/50 8SL 6DRIL.	1
2040	13009726	БЛОК ЭЛЕКТРОДОВ 27X55 d6,4D2X23 45°+ВИНТ ELEKTROD BLOĞU 27X55 d6,4D2X23 45°+VIDA.	BLOCO ELETROD.27X55 d6,4D2X23 45°+PARAF.	BLOK ELEKTROD 27X55 d6,4D2X23 45° +ŚRUBA	1
2041	13010050	ДЕРЖАТЕЛЬ ЭЛЕКТРОДА ELEKTROT DESTEĞİ	SUPORTE ELÉTRODO	WSPORNIK ELEKTRODY	1
2046	13010049	ВИНТ С БУРТИКОМ M4/БЛОК ЭЛЕКТРОДОВ M4 OMUZLU VİDA/ELEKTROT BLOĞU	PARAFUSO M4/BLOCO DE ELÉTRODOS	ŚRUBA M4/BLOKADA ELEKTROD	1
2047	13009725	ФЛАНЕЦ 20X11X2,6 FIX. ЭЛЕКТРОД FLANŞI 20X11X2,6 FIX. ELEKTROD	FLANGE 20X11X2,6 FIX. ELETRODO	KOŁNIERZ 20X11X2,6 FIX. ELEKTRODA	1
2070	13009727	КАБЕЛЬ РОЗЖИГА D6,35/D6,35 L950X2 ГОЛОВА ATEŞLEME KABLOSU D6,35/D6,35 L950X2 KAFA	CABO ENCENDIDO D6,35/D6,35 L950X2 CABECA	PRZEWÓD ALU. D6,35/D6,35 L950 X2 GŁOWA	1
2071	13010056	КРУГЛЫЙ РАЗЪЕМ ЗАПАЛЬН. ПРОВОД ИОН. X2 İYON ALÜMİNYUM KABLO YUVARLAK FİŞ X2	FICHA REDONDA CABO IGN.ION X2	WTYCZKA OKRĄGŁA KABLA ALU JON X2	1
2100	13018945	ГОЛОВКА СГОРАНИЯ DUAL FUEL L526 D156 CPL YANMA BAŞLIĞI DUAL FUEL L526 D156 CPL.	CABEÇA COMB.MISTO L526 D156 CPL.	GŁOWICA SPALANIA DUAL FUEL L526 D156 CPL	1
	13018946	ГОЛОВКА СГОРАНИЯ DUAL FUEL L726 D156 CPL YANMA BAŞLIĞI DUAL FUEL L726 D156 CPL.	CABEÇA COMB.MISTO L726 D156 CPL.	GŁOWICA SPALANIA DUAL FUEL L726 D156 CPL	1
	13018947	ГОЛОВКА СГОРАНИЯ DUAL FUEL L626 D156 CPL YANMA BAŞLIĞI DUAL FUEL L626 D156 CPL.	CABEÇA COMB.MISTO L626 D156 CPL.	GŁOWICA SPALANIA DUAL FUEL L626 D156 CPL	1
2101	13014682	ЛИНИЯ ФОРСУ. D42/10 L526 3 ФОРСУ. D.FUEL PÜSK.M.HATTI D42/10 L526 3M.HATTI D.FUEL	LÍNEA BOQU.D42/10 L526 3 BOQU. DUAL FUEL	UKŁAD DYSZY D42/10 L526 3 DYSZY DUALFUEL	1
	13014683	ЛИНИЯ ФОРСУ. D42/10 L726 3 ФОРСУ. D.FUEL PÜSK.M.HATTI D42/10 L726 3M.HATTI D.FUEL	LÍNEA BOQU.D42/10 L726 3 BOQU. DUAL FUEL	UKŁAD DYSZY D42/10 L726 3 DYSZY DUALFUEL	1
	13014684	ЛИНИЯ ФОРСУ. D42/10 L626 3 ФОРСУ. D.FUEL PÜSK.M.HATTI D42/10 L626 3M.HATTI D.FUEL	LÍNEA BOQU.D42/10 L626 3 BOQU. DUAL FUEL	UKŁAD DYSZY D42/10 L626 3 DYSZY DUALFUEL	1
2102	13009812	О-КОЛЬЦО D6X2 O-RING D6X2	O-RING D6X2	O-RING D6X2	1
2120	13009732	ГАЗОВОЕ КОЛЕНО T1/KN T1/KN GAZ DİRSEĞİ	COTOVELO GÁS T1/KN	KOLANKO GAZ. T1/KN	1
	13009733	ГАЗОВОЕ КОЛЕНО T2/KL T2/KL GAZ DİRSEĞİ	COTOVELO GÁS T2/KL	KOLANKO GAZ. T2/KL	1
	13009734	ГАЗОВОЕ КОЛЕНО T3/KM T3/KM GAZ DİRSEĞİ	COTOVELO GÁS T3/KM	KOLANKO GAZ. T3/KM	1
2125	13009731	О-КОЛЬЦО D75X4 O-RING D75X4	O-RING D75X4	O-RING D75X4	1
2140	13009713	СОПЛО ГОРЕЛКИ D227/172/190 L343 TUR.D171 BRÜLÖR BORUSU D227/172/190 L343 TUR.D171	TUBO QUEIMAD.D227/172/190 L343 TURB.D171	RURA PALNIKA D227/172/190 L343 TURB.D171	1
	13009714	СОПЛО ГОРЕЛКИ D227/172/190 L543 TUR.D171 BRÜLÖR BORUSU D227/172/190 L543 TUR.D171	TUBO QUEIMAD.D227/172/190 L543 TURB.D171	RURA PALNIKA D227/172/190 L543 TURB.D171	1
	13009715	СОПЛО ГОРЕЛКИ D227/172/190 L443 TUR.D171 BRÜLÖR BORUSU D227/172/190 L443 TUR.D171	TUBO QUEIMAD.D227/172/190 L443 TURB.D171	RURA PALNIKA D227/172/190 L443 TURB.D171	1
	13009716	СОПЛО ГОРЕЛКИ D227/160/205 L343 TUR.D171 BRÜLÖR BORUSU D227/160/205 L343 TUR.D171	TUBO QUEIMAD.D227/160/205 L343 TURB.D171	RURA PALNIKA D227/160/205 L343 TURB.D171	1
	13009717	СОПЛО ГОРЕЛКИ D227/160/205 L543 TUR.D171 BRÜLÖR BORUSU D227/160/205 L543 TUR.D171	TUBO QUEIMAD.D227/160/205 L543 TURB.D171	RURA PALNIKA D227/160/205 L543 TURB.D171	1
	13009718	СОПЛО ГОРЕЛКИ D227/160/205 L443 TUR.D171 BRÜLÖR BORUSU D227/160/205 L443 TUR.D171	TUBO QUEIMAD.D227/160/205 L443 TURB.D171	RURA PALNIKA D227/160/205 L443 TURB.D171	1
2145	13009722	ДАТЧИК ДАВЛЕНИЯ R1/8 R1/8 BASINÇ PRİZİ	TOMADA DE PRESSÃO R1/8	GNIAZDO CIŚNIENIOWE R1/8	1
2146	13009721	ШТУЦЕР, ПРАВЫЙ SAĞ RAKOR	CONEXÃO DIREITA	ZŁĄCZE PRAWE	1
2147	13009816	ЗАМЫКАЮЩАЯ ПЛАСТИНА RTC В СБОРЕ H-G H-G KAPATMA LEVHASI DONANIMI	PLACA FECHAM.RTC EQ. H-G	PŁYTA FERM. RTC EQ. H-G	1
2148	13009817	КРЫШКА NOZZLE ROD174X90 D63/NC160-210/V6 KAPAK NOZZLE ROD 174X90 D63/NC160-210/V6	TAMPA LINEA BOQ. 174X90 D63/NC160-210/V6	POKRYWA NOZZ.ROD 174X90 D63/NC160-210/V6	1
2150	13009719	ПРОКЛАДКА/ФЛАНЕЦ ГОРЕЛКИ 335X326X3 D250 CONTASI/BRULOR FLANŞI 335X326X3 D250	GAXETA/FLANGE QUEIMADOR 335X326X3 D250	USZCZELKA/KOŁNIERZ PAL.335X326X3 D250	1
2170	13009723	КОМПЛ-Т ВИНТ КРЕПЛЕН ТРУБЫ ГОРЕЛКИ (X3) BRÜLÖR TÜPÜ TESBİT VİDASI KİTİ (X3)	KIT PARAFUSO FIX. TUBO QUEIMADOR (X3)	ZESTAW ŚRUB MOCOW. RURA PALNIKA (X3)	1
2500	13009811	ГИДРОРАСПРЕДЕЛИТЕЛЬ В СБОРЕ (3X РЕЖИМ) HİDROLİK DİSTRİBÜTÖR TAKIMI (3ALL)	CJ. VÁLV. CONTROLE DÉBITO (3 ESTÁG.)	DYSTRYBUTOR HYDRAUL. EQ. (3ALL)	1
2510	13009813	ЭЛЕКТРОКЛАПАН LUC 121F63 2/2NF9W LUC 121F63 2/2NF9W ELEKTROVANA	VÁLVULA SOLENÓIDE LUC 121F63 2/2NF9W	CEWKA LUC 121F63 2/2NF9W	1
2520	13009814	ОБМОТКА LUCIFER 9W 9W LUCIFER BOBİN	BOBINA LUCIFER 9W	CEWKA LUCIFER 9 W	1
	65300750	ОБМОТКА PAR 32MM 115V 14W BOBIN PAR 32MM 115V 14W	BOBINA PAR 32MM 115V 14W	CEWKA PAR 32MM 115V 14W	1

	6XXXXXXX	RU TR	PT	PL	X
2600	13009724	ОСЬ/ШАРНИР ТЕЛО-ГОЛОВ.D12X210+D12X83 90° AKSI/MENTEŞ.VÜC.-KAFA D12X210+D12X83 90°	HASTE/DOBR.CORPO-CABE.D12X210+D12X83 90°	OŚ/ZAWIAS CIAŁO-GŁOWA D12X210+D12X83 90°	1
2710	13010048	ПРИНАДЛЕЖ. КОМПЛЕКТ, ПРИРОДН. ГАЗ DOĞAL GAZ KİTİ ERİŞİMİ	ACESS. KIT GÁS NATURAL	AKCESORIA ZESTAWU GAZ. NATURALNY	1
2711	13007041	ПРИНАДЛЕЖН. КОМПЛЕКТ ПРОПАН PROPAN KİTİ ERİŞİMİ	ACESS. KIT PROPANO	AKCESORIA KIT PROPAN	1
2712	13010046	ЗАТВОР/ДИФФУЗОР TAPA/ DİFÜZÖR	OBTURADOR/DIFUSOR	PRZEPUSTNICA/DYFUZOR	1
2714	13010047	ДИФФУЗОР ГАЗА D28 L170 6 SL.+RING (6PCS) GAZ DIFÜZOERÜ D28 L170 6 SL.+RING(6 PCS)	DIFUSOR GAS D28 L170 6 SL.+RING (6 PCS)	DYSZA GAZU D28 L170 6 SL.+RING (6 PCS)	1
2718	13014075	ДИФФУЗОР ГАЗА D6/4 L151 IGNITION GAZ DIFÜZOERÜ D6/4 L151 IGNITION	DIFUSOR GAS D6/4 L151 IGNICAO	DYSZA GAZU D6/4 L151 IGNITION	1
2785	13018948	ОГНЕВАЯ ГОЛ.L246 D156/75/14 6 DRIL.D25 GAZ KAFA L246 D156/75/14 6 DRIL.D25	CABEÇA GAS L246 D156/75/14 6 DRIL.D25	GŁOWICA GAZ L246 D156/75/14 6 DRIL.D25	1
3305	65300527	СЕРВОДВИГАТ.STE 4,5 B0.37/6-R +КАБЕ.L600 SERVOMOTOR STE 4,5 B0.37/6-R KABLO L600	SERVOMOTOR STE 4,5 B0.37/6-R +CABO L600	SERWOMOTOR STE 4,5 B0.37/6-R +KABEL L600	1
3310	65312327	КОЖУХ 125X79X73/СЕРВОДВИГАТЕЛЬ STE 4,5 KAPAĞI 125X79X73/SERVOMOTOR STE 4,5	COBERTURA 125X79X73/SERVOMOTOR STE 4,5	OSŁONA 125X79X73/SERWOMOTOR STE 4,5	1
3312	65301268	ГАЗОВЫЙ КЛАПАН 164X164 DN65 L200+STE GAZ KLAPESI 164X164 DN65 L200+SERVOM.STE	VALVULA GAS 164X164 DN65 L200+SERVOM.STE	ZAWÓR GAZU 164X164 DN65 L200+SERWOMO.STE	1
3317	65301267	ФИКСИРУ. УПОР,ВРАЩАЮЩ./ОСЬ STE 4.5 0.8NM ROTATİF STOPER /STANDART AKS 4.5 0.8NM	PARADA ROTAÇÃO VEIO STE 4,5 0,8NM	ODBOJNIK OBROTOWY /OŚ STE 4.5 0,8 NM	1
3319	65312458	МУФТА ПРОКЛАДКИ ПРОВ DIM.34X15/12 D.6,2 KABLO KANALI DIM.34X15/12 D.6,2	PASSA-CABOS DIM.34X15/12 D.6,2	PRZELOTKA PRZEWODU DIM.34X15/12 D6,2	1
3335	13010078	РЕЛЕ ДАВ. ВОЗДУХА GW 150 A5 5-150MB GAZ BASINÇ ŞALT. GW 150 A5 5-150MB	PRESSOSTATO GAS GW 150 A5 5-150MB	CZUJNIK CIŚ. GAZU GW 150 A5 5-150MB	1
3350	13009693	КОЛЛЕКТОР В СБОРЕ RP2 MANIFOLD KMPL. RP2	COLETOR COMPLETO RP2	KOLEKTOR KOMPL. RP2	1
3352	13009722	ДАТЧИК ДАВЛЕНИЯ R1/8 R1/8 BASINÇ PRİZİ	TOMADA DE PRESSÃO R1/8	GNIAZDO CIŚNIENIOWE R1/8	1
3360	13022996	ГАЗОВЫЙ КЛАПАН MBC700 SE S82 RP1 1/4+GPS GAZ VANASI MBC700 SE S82 RP1 1/4+GW150	VALVULA GAS MBC700 SE S82 RP1 1/4+GW150	ZAWÓR GAZOWY MBC700 SE S82 RP1 1/4+GW150	1
	65300008	ГАЗОВЫЙ КЛАПАН MBC1200 SE S82 RP2+GW150 GAZ VANASI MBC1200 SE S82 RP2+GPS GW150	VALVULA GAS MBC1200 SE S82 RP2+GPS GW150	ZAWÓR GAZOWY MBC1200 SE S82 RP2+GW150	1
3370	13022416	ФИЛЬТРУЮЩИЙ ЭЛЕМЕНТ MBC 700 FİLTRE ELEMANI MBC 700	ELEMENTO FILTRANTE MBC 700	WKŁAD FILTRA MBC 700	1
	13022417	ФИЛЬТРУЮЩИЙ ЭЛЕМЕНТ MBC 1200 FİLTRE ELEMANI MBC 1200	ELEMENTO FILTRANTE MBC 1200	WKŁAD FILTRA MBC 1200	1
3400	65301065	О-КОЛЬЦА D70+D74X3+D115/77/MBC700-1200 O-RING KIT D70+D74X3+D115/77/MBC700-1200	KIT O-RING D70+D74X3+D115/77/MBC700-1200	ZES.O-RING D70+D74X3+D115/77/MBC700-1200	1
3450	65322637	ФЛАНЕЦ MB415/420 RP1 1/2 + ВИЛ.ДАВЛЕНИЕМ FLANŞI MB415/420 RP1 1/2+BASINÇ MUSLUĞU	FLANGE MB415/420 RP1 1/2 + TOMA DE PRES.	KOŁNIERZ MB415/420 RP1 1/2 + ZATYCZKA	1
3505	65300527	СЕРВОДВИГАТ.STE 4,5 B0.37/6-R +КАБЕ.L600 SERVOMOTOR STE 4,5 B0.37/6-R KABLO L600	SERVOMOTOR STE 4,5 B0.37/6-R +CABO L600	SERWOMOTOR STE 4,5 B0.37/6-R +KABEL L600	1
3510	65312327	КОЖУХ 125X79X73/СЕРВОДВИГАТЕЛЬ STE 4,5 KAPAĞI 125X79X73/SERVOMOTOR STE 4,5	COBERTURA 125X79X73/SERVOMOTOR STE 4,5	OSŁONA 125X79X73/SERWOMOTOR STE 4,5	1
3512	65301268	ГАЗОВЫЙ КЛАПАН 164X164 DN65 L200+STE GAZ KLAPESI 164X164 DN65 L200+SERVOM.STE	VALVULA GAS 164X164 DN65 L200+SERVOM.STE	ZAWÓR GAZU 164X164 DN65 L200+SERWOMO.STE	1
3517	65301267	ФИКСИРУ. УПОР,ВРАЩАЮЩ./ОСЬ STE 4.5 0.8NM ROTATİF STOPER /STANDART AKS 4.5 0.8NM	PARADA ROTAÇÃO VEIO STE 4,5 0,8NM	ODBOJNIK OBROTOWY /OŚ STE 4.5 0,8 NM	1
3519	65312458	МУФТА ПРОКЛАДКИ ПРОВ DIM.34X15/12 D.6,2 KABLO KANALI DIM.34X15/12 D.6,2	PASSA-CABOS DIM.34X15/12 D.6,2	PRZELOTKA PRZEWODU DIM.34X15/12 D6,2	1
3600	65301067	ГАЗОВЫЙ КЛАПАН MBC1900 SE DN65+GPS GW150 GAZ VANASI MBC1900 SE DN65	VÁLVULA GÁS MBC1900 SE DN65+P.GAS GW150	ZAWÓR GAZOWY MBC1900 SE DN65+GPS GW150	1
3630	13010078	РЕЛЕ ДАВ. ВОЗДУХА GW 150 A5 5-150MB GAZ BASINÇ ŞALT. GW 150 A5 5-150MB	PRESSOSTATO GAS GW 150 A5 5-150MB	CZUJNIK CIŚ. GAZU GW 150 A5 5-150MB	1
3700	65301066	О-КОЛЬЦА D70X3+ D115/77(2)/MBC1900/VGD O-RING KIT D70X3+ D115/77(2)/MBC1900/VGD	KIT O-RING D70X3+ D115/77(2)/MBC1900/VGD	ZEST.O-RING D70X3+D115/77(2)/MBC1900/VGD	1
3910	13009703	ГАЗ ФИЛЬТР ВНЕШНИЙ DN65 DN65 HARİCİ GAZ FİLTRESİ	FILTRO GÁS EXTERNO DN65	FILTR ZEWNĘTRZNY DN 65	1
3911	13009704	ФИЛЬТРУЮЩИЙ ЭЛЕМЕНТ DN65 /ANELLO FİLTRE ELEMANI DN65 /ANELLO	ELEMENTO FILTRANTE DN65 /ANELLO	WKŁAD FILTRA DN65 /ANELLO	1
4005	65300527	СЕРВОДВИГАТ.STE 4,5 B0.37/6-R +КАБЕ.L600 SERVOMOTOR STE 4,5 B0.37/6-R KABLO L600	SERVOMOTOR STE 4,5 B0.37/6-R +CABO L600	SERWOMOTOR STE 4,5 B0.37/6-R +KABEL L600	1
4010	65312327	КОЖУХ 125X79X73/СЕРВОДВИГАТЕЛЬ STE 4,5 KAPAĞI 125X79X73/SERVOMOTOR STE 4,5	COBERTURA 125X79X73/SERVOMOTOR STE 4,5	OSŁONA 125X79X73/SERWOMOTOR STE 4,5	1
4012	65301268	ГАЗОВЫЙ КЛАПАН 164X164 DN65 L200+STE GAZ KLAPESI 164X164 DN65 L200+SERVOM.STE	VALVULA GAS 164X164 DN65 L200+SERVOM.STE	ZAWÓR GAZU 164X164 DN65 L200+SERWOMO.STE	1
4017	65301267	ФИКСИРУ. УПОР,ВРАЩАЮЩ./ОСЬ STE 4.5 0.8NM ROTATİF STOPER /STANDART AKS 4.5 0.8NM	PARADA ROTAÇÃO VEIO STE 4,5 0,8NM	ODBOJNIK OBROTOWY /OŚ STE 4.5 0,8 NM	1
4019	65312458	МУФТА ПРОКЛАДКИ ПРОВ DIM.34X15/12 D.6,2 KABLO KANALI DIM.34X15/12 D.6,2	PASSA-CABOS DIM.34X15/12 D.6,2	PRZELOTKA PRZEWODU DIM.34X15/12 D6,2	1

	6XXXXXXX	RU TR	PT	PL	X
4030	13020958	СОЕДИНИТЕЛ.КАБЕЛЬ AGA 62 PLUG DIN L270 KABLOSU BAĞ AGA 62 FIŞ DIN L270	CABO CONEXAO AGA 62 TOMADA DIN L270	PRZEWÓD POŁĄCZYĆ AGA 62 WTYCZKA DIN L270	1
4100	65323661	ГАЗОВЫЙ КЛАПАН VGD40 065 DN65 GAZ VANASI VGD40 065 DN65	VÁLVULA GÁS VGD40 065 DN65	ZAWÓR GAZOWY VGD40 065 DN65	1
4102	65107100	СЕРВОДВИГАТЕЛЬ SKP25.003 E2 БЕЗ КОНЦЕВЫ SERVOMOTOR SKP 25.003 E2 LIMIT ANAHTAR	SERVOMOT. GÁS SKP25.003 E2 SEM FIM CURSO	SERWOSILNIK SKP25.003E2 BEZ WYŁĄCZNIKI	1
4105	13020951	ИСП. МЕХАНИЗМ ГАЗ SKP15.000E2 S.КОНЦЕВОЙ KURS SONSUZ SKP15.000E2 GAZ SERVOMOTORU	ATUADOR GÁS SKP15.000E2 S.FIM CURSO	SIŁOWNIK GAZ. SKP15.000E2 S.WYŁ.KRAŃCOWY	1
4110	13010078	РЕЛЕ ДАВ. ВОЗДУХА GW 150 A5 5-150MB GAZ BASINÇ ŞALT. GW 150 A5 5-150MB	PRESSOSTATO GAS GW 150 A5 5-150MB	CZUJNIK CIŚ. GAZU GW 150 A5 5-150MB	1
4150	65301068	ТРУБКА ОТБОРА ДАВЛЕНИЯ ГАЗА СО ШТУЦЕР. RAKORLU GAZ BASINÇ BORUSU	TUBO DE PRESSÃO GÁS COM CONEXÃO	RURA CIŚNIENIA GAZU ZE ZŁĄCZEM	1
4160	13023188	УГЛОВОЙ ШТУЦЕР DIRSEKLI RAKOR	CONEXÃO COTOVELO	ZŁĄCZKA TYPU KOLANKO	1
4170	13009721	ШТУЦЕР, ПРАВЫЙ SAĞ RAKOR	CONEXÃO DIREITA	ZŁĄCZE PRAWE	1
4200	65301066	O-КОЛЬЦА D70X3+ D115/77(2)/MBC1900/VGD O-RING KIT D70X3+ D115/77(2)/MBC1900/VGD	KIT O-RING D70X3+ D115/77(2)/MBC1900/VGD	ZEST.O-RING D70X3+D115/77(2)/MBC1900/VGD	1
4410	13009703	ГАЗ ФИЛЬТР ВНЕШНИЙ DN65 DN65 HARİCİ GAZ FİLTRESİ	FILTRO GÁS EXTERNO DN65	FILTR ZEWNĘTRZNY DN 65	1
4411	13009704	ФИЛЬТРУЮЩИЙ ЭЛЕМЕНТ DN65 /ANELLO FİLTRE ELEMANI DN65 /ANELLO	ELEMENTO FILTRANTE DN65 /ANELLO	WKŁAD FILTRA DN65 /ANELLO	1
5010	65311362	ИСПЫТАТЕЛЬНАЯ ГОРЕЛКА С КНОПКОЙ PB2 BASMA DÜĞMESİ İLE BRÜLÖR TEST PB2	QUEIMADOR DE ENSAIO COM B. PRESSÃO PB2	PALNIK TEST Z PRZYCISKIEM PB2	1
5130	65326220	РЕЛЕ ДАВ. ГАЗА МАКСИ. UB50A2 КАБЕЛЬ L600 GAZ BASINÇ ŞALT. MAKSI.UB50A2+KABLOSU	PRESSOSTATO GAS MAX.UB50 A2+CABO L600	CZUJNIK CIŚ. GAZU MAKS.UB50A2+PRZEW.L600	1

	6XXXXXXX				X

	6XXXXXXX				X

ADDRESSES

https://www.elco-burners.com **www.elco.net**

LIST OF THE ABBREVIATIONS

: Maintenance parts / Pièces d'entretien / Materiali di consumo /
: Piezas de mantenimiento / Hilfsmaterial / Onderhoudsonderdelen

: Wearing parts / Pièces d'usure / Parti di usura
: Piezas de desgaste / Verschleissteile / Slijtageonderdelen

* : Item not stocked, manufactured to order / Article non stocké, fabrication à la demande /
: Articolo non a magazzino, produzione all'ordine / Artículo no almacenado, fabricación previa solicitud /
: Keine Lagerware, wird bei Bedarf bestellt, Artikel niet op voorraad, fabricage op bestelling

IDENTIFICATION PLATE

SERIAL NUMBER

7 Characters : 00001 / K A

Sequencial number

Trimester of manufacture : from A to D

Year of manufacture :
- K → 2003
- L → 2004
- M → 2005
- etc ...

8 Characters : 00001 / L 09

Sequencial number

Month of manufacture

Year of manufacture :
- K → 2003
- L → 2004
- M → 2005
- etc ...

11 Characters : 2007 1370 P 07

Year of manufacture

Month of manufacture

Year of manufacture :
- P → 2007
- R → 2008
- S → 2009
- T → 2010
- U → 2011
- W → 2012
- X → 2013
- Y → 2014
- Z → 2015

Sequencial number

18 Characters : 070115 000000000001

Sequencial number

Manufacturing day (07) / Month (01) / Year (15)

The indications mentionned on the prices, commercial or technical literature and the scheme are written for your guidance and are available at a given time. The CONSTRUCTOR retains the power to modify the presentation, the form, the size, the conception or the material of the products.